THE CITY OF

EULESS

STANDARD CONSTRUCTION DETAILS

INDEX TO
CITY OF EULESS
STANDARD DETAILS

I. WATER IMPROVEMENTS

DETAIL NO.	PAGE	DESCRIPTION
COE-FH-1	1	FIRE HYDRANT DETAIL
COE-FH-2	2	SPECIAL/NORMAL FIRE HYDRANT SETTING
COE-FH-3	3	FIRE HYDRANT SPECIFICATIONS
COE-GV-1	4	GATE VALVE SPECIFICATIONS
COE-GV-2	5	LARGE GATE VALVE DETAILS
COE-GV-3	6	VALVE PAD DETAILS
COE-AJ-1	7	ANCHOR/MECHANICAL JOINTS
COE-US-1	8	SEPARATION REQUIREMENTS
COE-WLE	9	WATER LINE EMBEDMENT
COE-CB-1	10	CASING/BORE DETAIL
COE-TT-1	11	TRACER TAPE DETAIL
COE-TB-1	12	HORIZONTAL THRUST BLOCK
COE-TB-2	13	PLUG/TEE THRUST BLOCK
COE-TB-3	14	VERTICAL BEND THRUST BLOCK
COE-MV-1	15	2” METER VAULT – PLAN VIEW
COE-MV-2	16	2” METER VAULT – ELEVATION VIEW
COE-MV-3	17	PRECAST CONCRETE METER VAULT
COE-MV-4	18	CAST-IN-PLACE METER VAULT
COE-MV-5	19	METER VAULT SPECIFICATIONS
COE-AWS	20	2” ALTERNATE WATER SERVICE
COE-FSS	21	FLUSHING/SAMPLING STATION
COE-TSC-1	22	TYPICAL SERVICE CONNECTION
COE-WM-1	23	3”,4”,6” AND 8” METER – PLAN VIEW
COE-WM-2	24	3”,4”,6” AND 8” METER – ELEVATION VIEW
COE-WM-3	25	3”,4”,6” AND 8” METER – DIMENSION VIEW
COE-VS-1	26	VAULT SECTIONS – CONCRETE ONLY
COE-VS-2	27	METER SPECIFICATIONS AND SCHEDULE OF DIMENSIONS
COE-ARV-1	28	VERTICAL COMBINATION AIR RELEASE VALVE
COE-BOS-1	29	BLOW OFF BRANCH AND SUMP DETAILS
COE-MAV-1	30	MANUALLY OPERATED AIR VALVE
COE-MHC-1	31	STANDARD CAST IRON MANHOLE FRAME AND COVER
COE-FS-1/2	32	FIRE SPRINKLER VAULT
COE-FS-3	33	FIRE SPRINKLER VAULT – SECTIONS B-B & C-C
COE-FS-4	34	FIRE SPRINKLER VAULT – VALVE BOX PAD
COE-FS-5	35	FIRE SPRINKLER VAULT – GNERAL NOTES

II. SANITARY SEWER IMPROVEMENTS

DETAIL NO.	PAGE	DESCRIPTION
COE-SSE-1	36	SANITARY SEWER EMBEDMENT DETAILS – CLASS 1 AND 2
COE-SSE-2	37	SANITARY SEWER EMBEDMENT DETAILS – CLASS 3 AND ENCASEMENT
COE-US-2	38	SEPARATION REQUIREMENTS
COE-CIP-1	39	CAST-IN-PLACE DROP MANHOLE
COE-PCMH	40	48-INCH PRECAST MANHOLE
COE-SSMH	41	CAST-IN-PLACE CONCRETE MANHOLE
COE-TMH-1	42	TRANSITION DETAILS FOR 5’ DIAMETER MANHOLE
COE-FGMH	43	FIBERGLASS MANHOLE
COE-FGMH A-A	44	FIBERGLASS MANHOLE SECTION A-A
COE-FTA-1	45	FLAT TOP ALTERNATE FOR 5’ DIAMETER MANHOLE
COE-MHC PA	46	STANDARD HEAVY DUTY MANHOLE FRAME AND COVER
COE-WTC-1	47	WATER TIGHT CAST IRON MANHOLE FRAME AND COVER
COE-CO-1	48	STANDARD SERVICE CONNECTION & RESIDENTIAL CLEANOUT #1
COE-CO-2	49	RESIDENTIAL CLEANOUT #2
COE-CB-2	50	CASING BORING DETAIL

INDEX TO
CITY OF EULESS
STANDARD DETAILS

III. STORM DRAINAGE IMPROVEMENTS

DETAIL NO.	PAGE	DESCRIPTION
COE-RCI 1	51	CURB INLET DETAILS - RECESSED
COE-RCI 2	52	CURB INLET DETAIL – CENTER WALL
COE-RCI 3	53	CURB INLET DETAIL – GRADE INLET
COE-RCI 4	54	CURB INLET DETAIL – LOW POINT
COE-NRC 1	55	CURB INLET DETAIL – NON-RECESSED
COE-NRC 2	56	CURB INLET DETAIL – NON-RECESSED CENTER WALL
COE-NRC 3	57	CURB INLET DETAIL – NON-RECESSED PLAN VIEW
COE-SDJB-1	58	STORM DRAIN JUNCTION BOX
COE-SDJB-2	59	STORM DRAIN JUNCTION BOX
COE-Y1-1	60	TYPICAL “Y” INLET PLAN
COE-Y1-2	61	TYPICAL “Y” INLET SECTION A-A
COE-CA-1	62	CONCRETE APRON W/ SLOPING HEADWALL PLAN VIEW
COE-CA-2	63	CONCRETE APRON W/ SLOPING HEADWALL SECTION VIEW
COE-EB-1	64	CLASS “B” EMBEDMENT

IV. STREET PAVING IMPROVEMENTS

DETAIL NO.	PAGE	DESCRIPTION
COE-FL	65	FIRE LANE EASEMENT
COE-RC-1	66	RESIDENTIAL STREET~REINFORCED CONCRETE
COE-RCP-1	67	MINOR COLLECTOR STREET~REINFORCED CONCRETE
COE-RCP-2	68	MAJOR THOROGHFARE STREET~REINFORCED CONCRETE
COE-PS-1	69	TYPICAL 6" CURB~TYPICAL CONCRETE PAVEMENT SECTION
COE-JT-1	70	JOINT DETAILS
COE-SP-1	71	TYPICAL DRIVE APPROACH
COE-SP-2	72	PAVEMENT HEADER DETAIL
COE-VG-4	73	CONCRETE VALLEY GUTTER
COE-PP-1	74	TYPE "A" PAVEMENT PATCH
COE-PP-2	75	TYPE "B" PAVEMENT PATCH
COE-PP-3	76	TYPE "C" PAVEMENT PATCH
COE-PP-4	77	TYPE "F" PAVEMENT PATCH
COE-SW	78	TYPICAL SIDEWALK PLAN
COE-DW	79	DETECTABLE WARNINGS
COE-HC-1	80	TYPE "A" RAMP
COE-HC-2	81	TYPE "B" RAMP
COE-HC-4	82	TYPE "D" RAMP
COE-HC-5	83	TYPE "E" RAMP
COE-HC-6	84	TYPE "F" RAMP
COE-HC-9	85	TYPE "G" RAMP
COE-HC-10	86	TYPE "H" RAMP
COE-HC-11	87	TYPE "J" RAMP
COE-PC-BMP-1	88	FILTRATION SYSTEM
COE-PC-BMP-2	89	GREASE MANAGEMENT
COE-PC-BMP-3	90	STORMWATER DENTENTION
COE-PC-BMP-4	91	INFILTRATION SYSTEM
COE-SWPPP-1	92	STORM WATER PREVENTION
COE-SWPPP-2	93	STORM WATER PREVENTION
COE-SWPPP-3	94	STORM WATER PREVENTION

I

WATER DETAILS

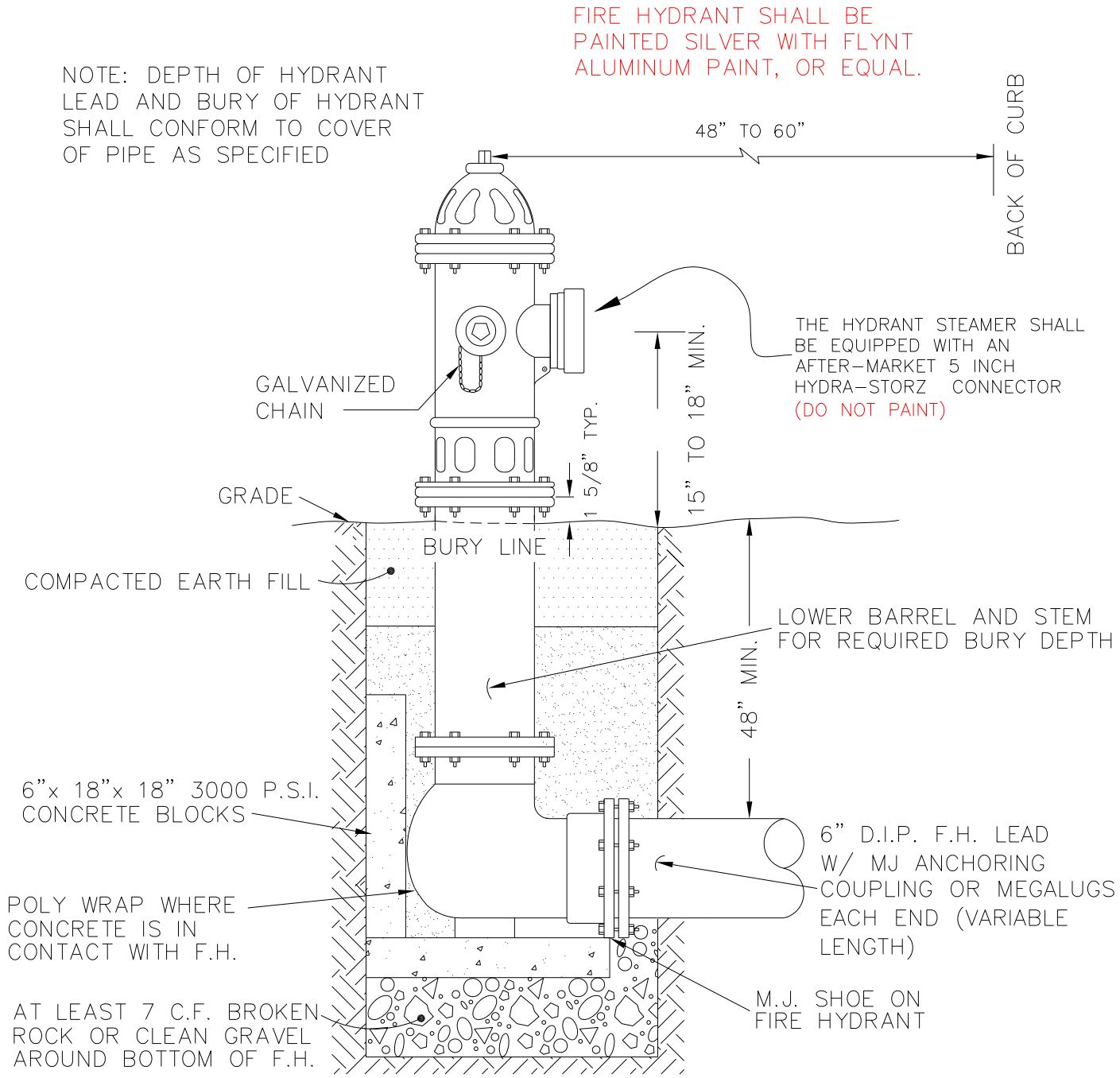

FIRE HYDRANT DETAIL

NOTES:

1. A BLUE TWO-WAY REFLECTIVE MARKER SHALL BE INSTALLED N THE CENTERLINE OF THE STREET ADJACENT TO THE HYDRANT.

FIRE HYDRANT DETAILS

CITY OF EULESS

COE-FH-1

6/15

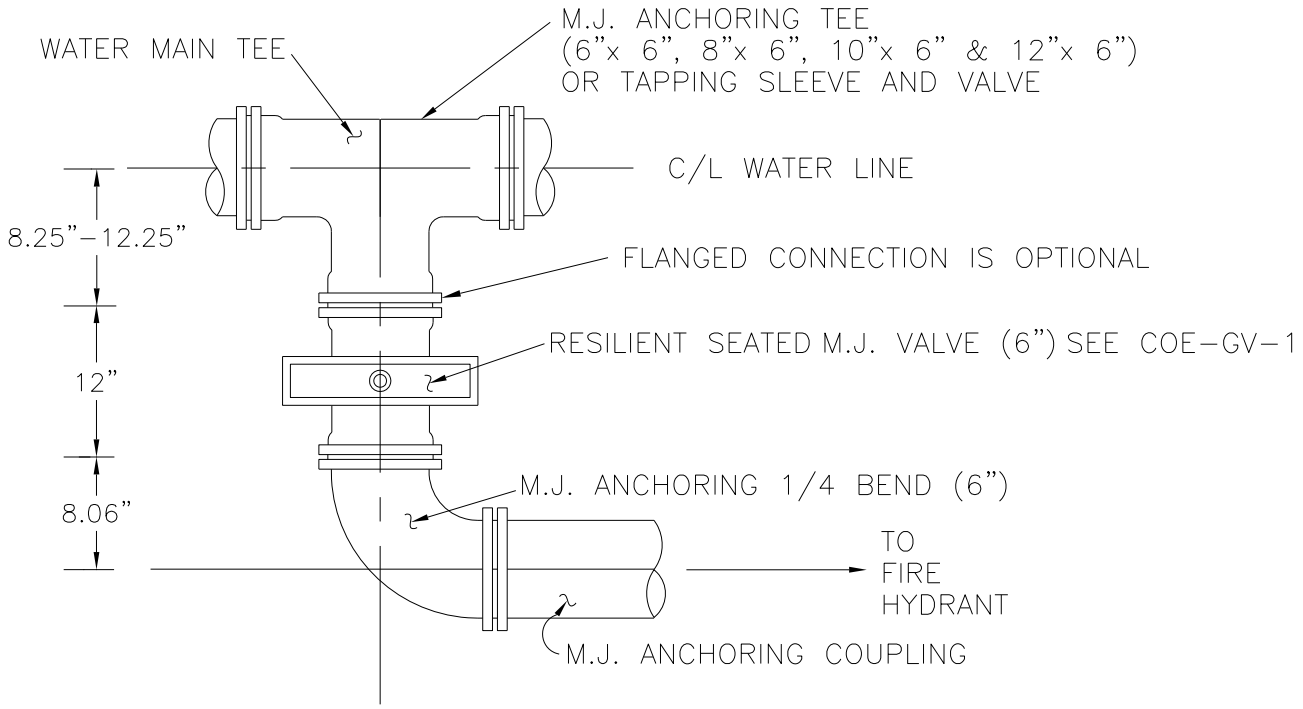

THESE MEASUREMENTS ARE FOR 6" FITTINGS. ADJUST MEASUREMENTS FOR THE APPLICABLE PIPE SIZE

SPECIAL FIRE HYDRANT SETTING

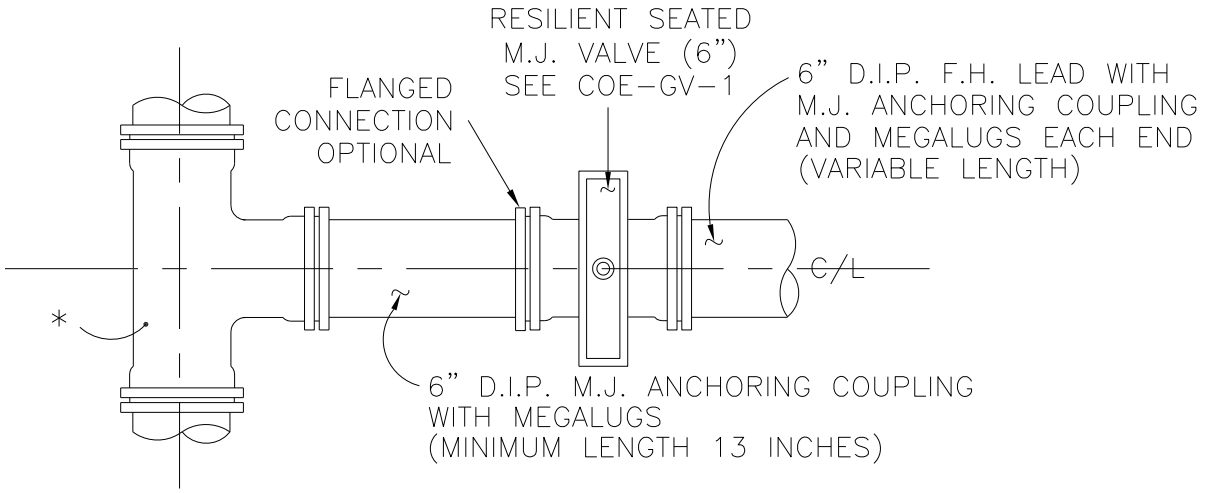

NORMAL FIRE HYDRANT SETTING

*D.I.P. TEE IN WATER MAIN WITH 6". STANDARD M.J. BRANCH. USE M.J. x M.J. x S. TEE (ANCHORING TEE) WHEN M.J. VALVE IS CONNECTED DIRECTLY TO THE TEE. WHEN F.H. IS TO BE INSTALLED ON AN EXISTING WATER MAIN USE TAPPING SLEEVE AND VALVE (F.x M.J.)

FIRE HYDRANT DETAILS	
CITY OF EULESS	
COE–FH–2	1/15

FIRE HYDRANT SPECIFICATIONS

1. ALL FIRE HYDRANTS IN THE CITY OF EULESS SHALL MEET OR EXCEED AWWA STANDARD FOR DRY BARREL FIRE HYDRANTS, C502. VALVE OPENING SHALL BE 5 1/4-INCHES IN 1/4-INCHES IN DIAMETER. ALL FIRE HYDRANTS SHALL OPEN TO THE LEFT (COUNTER-CLOCKWISE).

2. ALL HYDRANTS SHALL BE EQUIPPED WITH:
   - A. 1-STEAMER NOZZLE, 4 1/2-INCH I.D., 5 3/4-INCH O.D. NATIONAL STANDARD THREADS, 4 THREADS PER INCH.
   - B. 2-HOSE NOZZLES, 2 1/2-INCH I.D., 3 1/16-INCH O.D., NATIONAL STANDARD THREADS, 7 1/2 THREADS PER INCH.
   - C. THE HYDRANT STEAMER SHALL BE EQUIPPED WITH AN AFTER-MARKET 5 INCH HYDRA-STORZ CONNECTOR WITH BUILT-IN BUTTERFLY VANES AS MANUFACTURED BY HYDRA-SHIELD MFG., IRVING, TX. OR APPROVED EQUAL.

3. ALL FIRE HYDRANTS SHALL BE CONSTRUCTED INCORPORATING THE FOLLOWING COMPONENTS AND FEATURES:
   - A. LUBRICATION PLUG, SITUATED TO PROVIDE EASY ACCESS TO LUBRICATE OPERATING THREADS.
   - B. BRONZE OPERATING NUT, NATIONAL STANDARD PENTAGON MEASURING 1 1/2-INCH POINT TO FLAT.
   - C. OPERATING LOCKNUT/WEATHER SHIELD THAT FUNCTIONS AS THRUST BEARING TO RETAIN BRONZE OPERATING NUT WITH O-RING SEAL TO PREVENT ENTRY OF WEATHER ELEMENTS.
   - D. NYLON THRUST WASHER TO ASSURE FRICTION-FREE LOW TORQUE OPERATION.
   - E. BRASS ROD SLEEVE TO SHEATH THE UPPER OPERATING ROD FOR CONTACT WITH O-RINGS IN SEAL PLATE THROUGHOUT TRAVEL. ALSO AN O-RING SHALL BE INSET BETWEEN SLEEVE AND ROD.
   - F. O-RING SEAL PLATE TO PREVENT WATER FROM ENTERING BONNET DURING OPERATION.
   - G. TRAFFIC IMPACT FLANGE THAT ALLOWS THE HYDRANT TO BREAK CLEANLY WITHOUT DAMAGE TO STRUCTURAL OR COMPONENTS INCLUDING A TRAFFIC STEM COUPLING DESIGNED TO BREAK WITHOUT DAMAGE TO MAIN BREAK WITHOUT DAMAGE TO MAIN VALVE OR LOWER ROD. INSTALL FLANGE A MAXIMUM OF 6" ABOVE GRADE. DO NOT PLACE BELOW GRADE. ALL BOLTS SHALL BE ELECTRO-ZINC PLATED FOR BOLTS SHALL BE ELECTRO-ZINC PLATED FOR CORROSION PROTECTION.
   - H. BRONZE MAIN VALVE TOP PLATE WHICH INCLUDES TWO RUBBER FACED BRONZE DRAINAGE VALVES AND PROVIDES POSITIVE CLOSURE OF TWO BRONZE BUSHED DRAIN PORTS DURING OPERATION. AFTER OPERATION, THE DRAIN VALVES SHALL DRAIN ALL WATER FROM THE STANDPIPE TO PREVENT COLD WEATHER FREEZE-UP. DRAIN PORTS SHALL BE PURGED AS HYDRANT IS OPENED AND AGAIN AS HYDRANT IS CLOSED.
   - I. BRONZE MAIN VALVE SEAT - CONTOURED FOR SMOOTH FLOW AND LOW PRESSURE DROP.
   - J. SOLID BRONZE MAIN VALVE SEAT RETAINER RING PERMANENTLY AFFIXED IN SHOE AND O-RING SEALED TO PROVIDE FOR BRONZE TO BRONZE INTERFACE FOR MAIN VALVE SEAT.
   - K. RUBBER MAIN VALVE SEAT, COMPRESSION DESIGN, OPENING AGAINST SYSTEM PRESSURE DESIGNED TO ALLOW PRESSURE AGAINST MAIN VALVE ASSEMBLY KEEP VALVE TIGHT EVEN IF NOZZLE SECTION IS SEPARATED AT THE GROUND-LINE FLANGE.
   - L. STAINLESS STEEL LOCK RING TO PREVENT LOOSENING OF STEM CAP NUT.
   - M. HYDRANT SHOE SHALL BE FUSION BONDED EPOXY COATED, I.D. AND O.D., AS WELL AS THE MAIN VALVE BOTTOM AND O.D., AS WELL AS THE MAIN VALVE BOTTOM PLATE AND LOWER ROD STEM CAP NUT.

4. SHOE CONNECTION SHALL BE 6-INCH MECHANICAL JOINT.

5. BURY SHALL BE SPECIFIED WHEN ORDERED AND REFERS TO THE DISTANCE FROM GROUND LINE TO BOTTOM OF CONNECTING PIPE. EXTENSION KITS SHALL BE AVAILABLE IN 6-INCH INCREMENTS.

APPROVED FIRE HYDRANTS:

M & H - STYLE 129
AMERICAN DARLING - B-84-B
MUELLER - CENTURION

NOTE:
THE MANUFACTURER SHALL HAVE A RELIABLE AND REPUTABLE DEALER WITHIN 25 MILES OF THE CITY OF EULESS AND MAINTAINS IN STOCK THE SPECIFIED HYDRANTS, EXTENSION KITS, AND REPAIR KITS AVAILABLE IN 24 HOURS OR LESS.

FIRE HYDRANT DETAILS

CITY
OF
EULESS

COE-FH-3 1/15

WATER LINE GATE VALVE SPECIFICATIONS

1. ALL WATER LINE GATE VALVES IN THE CITY OF EULESS SHALL MEET OR EXCEED AWWA GATE VALVE STANDARD C-515, LATEST REVISION.
2. ALL GATE VALVES SHALL BE OF THE RESILIENT SEATED WEDGE TYPE, FUSION BONDED EPOXY COATED TO AWWA C-550, DUCTILE IRON BODY DESIGN.
3. ALL GATE VALVES SHALL BE RATED FOR ZERO LEAKAGE AT 200 PSI WATER WORKING PRESSURE AND HAVE A 400 PSI HYDROSTATIC TEST FOR STRUCTURAL SOUNDNESS FOR 4-INCH THROUGH 12-INCH DIAMETER. (ALL TESTING SHALL BE CONDUCTED IN ACCORDANCE WITH AWWA C-509).
4. GATE VALVES SHALL BE FURNISHED WITH TYPE OF END CONNECTION SPECIFIED AS FOLLOWS: 125# ANSI FLANGE DRILLING, OR MECHANICAL JOINT PER AWWA C-111.
5. STEMS SHALL BE MANGANESE BRONZE HAVING A MINIMUM TENSIL STRENGTH OF 60,000 PSI., A MINIMUM YIELD OF 20,000 PSI.
6. BOLTS SHALL BE ELECTRO-ZINC PLATED STEEL WITH "T" OR HEX HEADS AS SPECIFIED AND HEX NUTS IN ACCORDANCE WITH ASTM A-307.
7. VALVES SHALL BE OF THE NON-RISING STEM TYPE (NRS).
8. NRS STEM THRUST COLLARS SHALL BE CAST INTEGRAL WITH THE STEM AND MACHINED TO SIZE. A STAINLESS STEEL THRUST BEARING SHALL BE IN INCORPORATED TO OPTIMIZE OPERATING TORQUES.
9. NRS VALVES SHALL BE FURNISHED WITH O-RING STEM SEALS USING TWO O-RINGS LOCATED ABOVE AND ONE O-RING BELOW THE THRUST COLLAR. O-RINGS SHALL BE SET IN GROOVES IN THE STEM, THE O-RING GROOVE SHALL NOT BE LESS THAN THE ROOT DIAMETER OF THE STEM THREADS.
10. THE INTERNAL AND EXTERNAL IRON SURFACES OF THE VALVE BODY AND BONNET SHALL BE COATED WITH FUSION BONDED EPOXY TO AWWA C-550 STANDARDS. GATES FOR ALL VALVE SIZES SHALL BE COMPLETELY ENCAPSULATED IN RUBBER INCLUDING STEM BORE, BE FIELD REPLACEABLE AND PROVIDE A DUAL SEAL ON THE MATING BODY SEAT.
11. VALVES SHALL BE CAPABLE OF INSTALLATION IN ANY POSITION WITH RATED SEALING IN BOTH DIRECTIONS.
12. RUBBER SEATS OF SPECIALLY COMPOUNDED SBR MATERIAL SHALL BE UTILIZED AND BE CAPABLE OF SEALING UNDER NORMAL CONDITIONS.
13. THE VALVE BODY SHALL HAVE INTEGRAL GUIDES ENGAGING INTEGRAL LUGS IN THE GATE IN A TONGUE AND GROOVE MANNER, SUPPORTING THE GATE THROUGHOUT THE ENTIRE OPEN/CLOSE TRAVEL.
14. THE INSIDE AND OUTSIDE OF VALVE BODY, BONNET AND SEAL PLATE SHALL BE COATED, MINIMUM 3-5 MILS, WITH FUSION BONDED EPOXY MEETING AWWA C-550, LATEST REVISION.
15. MARKING SHALL BE IN ACCORDANCE WITH AWWA C-515 STANDARDS, TO INCLUDE THE NAME OF MANUFACTURER, THE YEAR OF MANUFACTURING, MAXIMUM WORKING PRESSURE AND SIZE OF VALVE.
16. RESILIENT SEATED GATE VALVES SHALL BE COVERED BY TEN YEAR LIMITED WARRANTY AGAINST DEFECTIVE MATERIALS OR WORKMANSHIP.
17. ALL BOLTS, GASKETS, GLANDS, RINGS AND OTHER ACCESSORIES SHALL BE DELIVERED WITH EACH VALVE.
18. ALL RESILIENT SEATED GATE VALVES SHALL BE LEFT TURN TO OPEN (LO).

THE MANUFACTURER SHALL HAVE A RELIABLE AND REPUTABLE DEALER WITHIN 25 MILES OF THE CITY OF EULESS AND MAINTAINS IN STOCK THE SPECIFIED VALVES, ALL ATTACHMENTS AND REPAIR KITS AVAILABLE IN 24 HOURS OR LESS.

APPROVED GATE VALVES:
M & H - STYLE 3067
AMERICAN DARLING - CRS 80 SERIES
MULLER - 2360 SERIES
AMERICAN FLOW CONTROL (AFC) 2500 SERIES

GATE VALVE SPECIFICATIONS

CITY
OF
EULESS

COE-GV-1 01/15

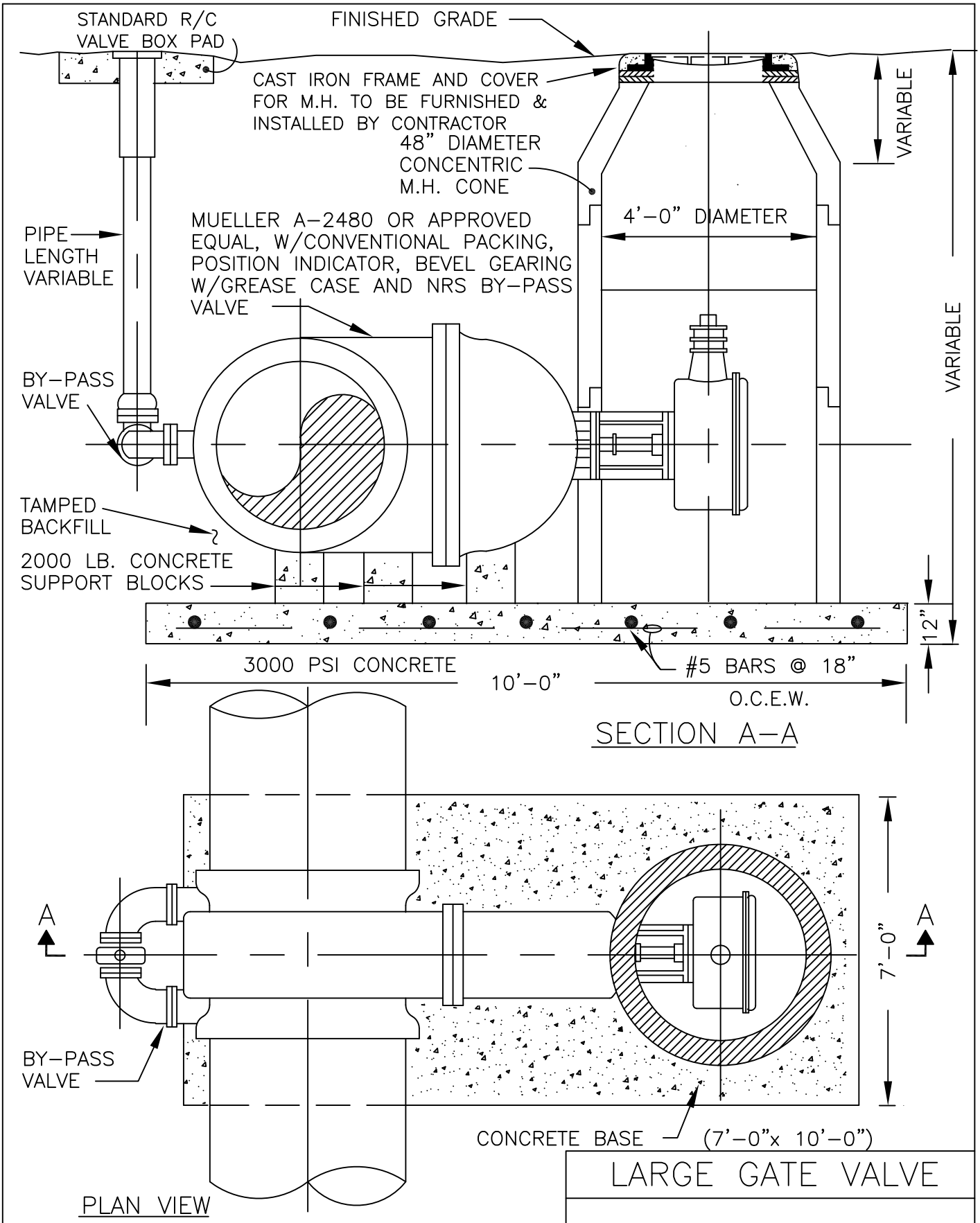

TYPICAL GATE VALVE DETAIL
WITH MANHOLE OVER GEARS
-NO SCALE-

LARGE GATE VALVE

CITY
OF
EULESS

COE-GV-2

1/01

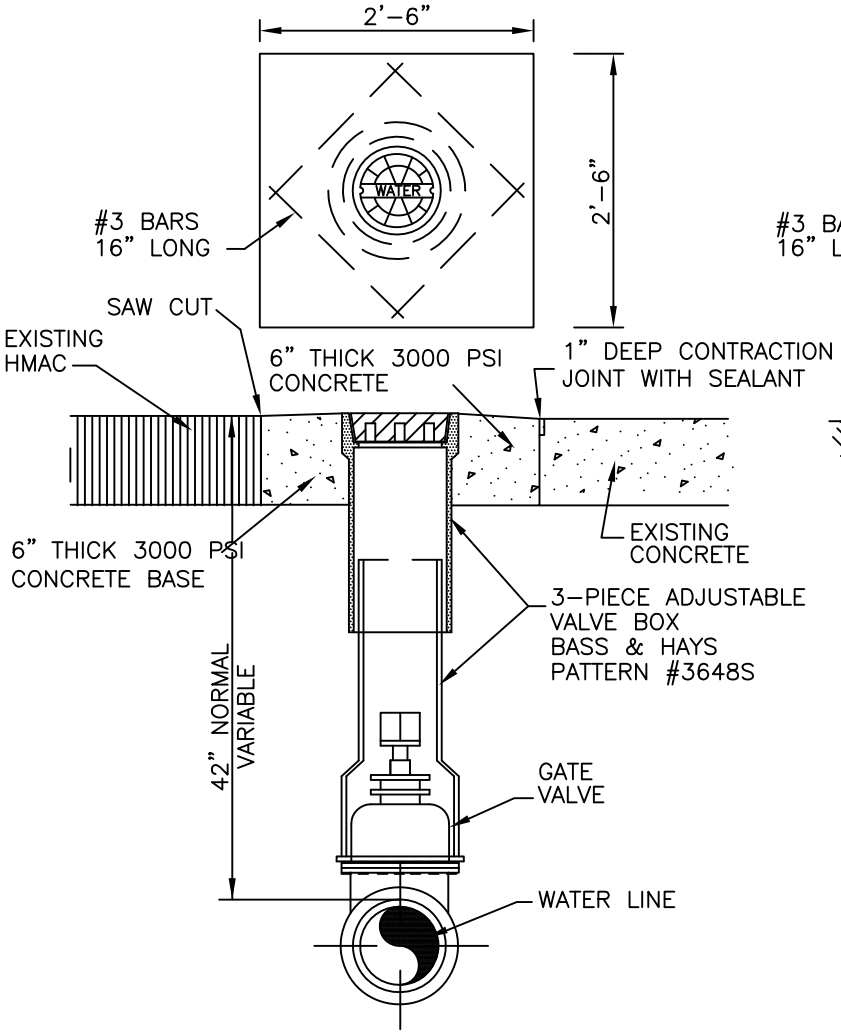

VALVES WITHIN ROADWAYS
OR OTHER PAVED OR SURFACED AREAS

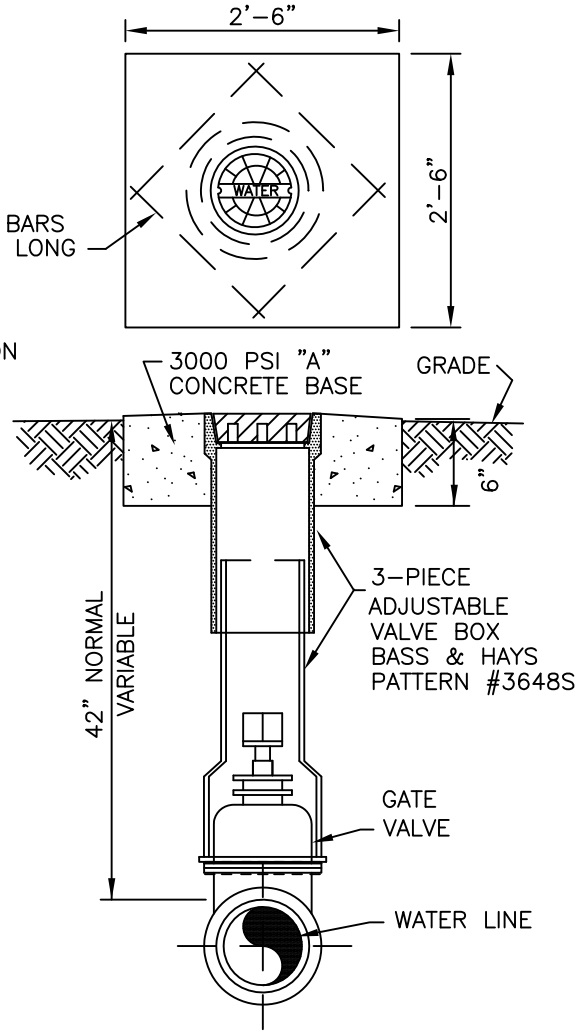

VALVES IN YARDS OR OTHER AREAS
NOT SUBJECT TO TRAFFIC

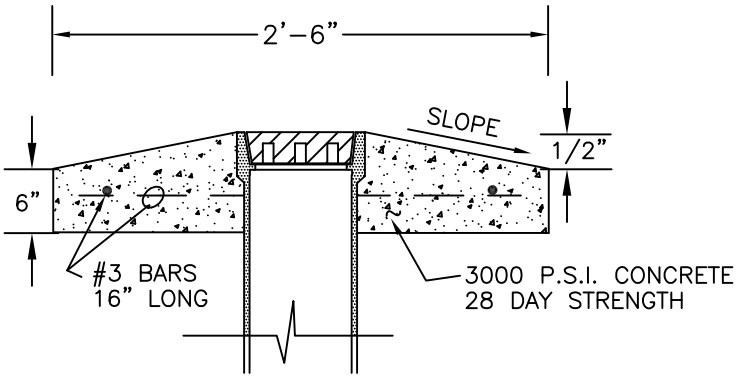

SECTION THROUGH CONCRETE PAD

VALVE PAD DETAILS

CITY
OF
EULESS

COE-GV-3 2/99

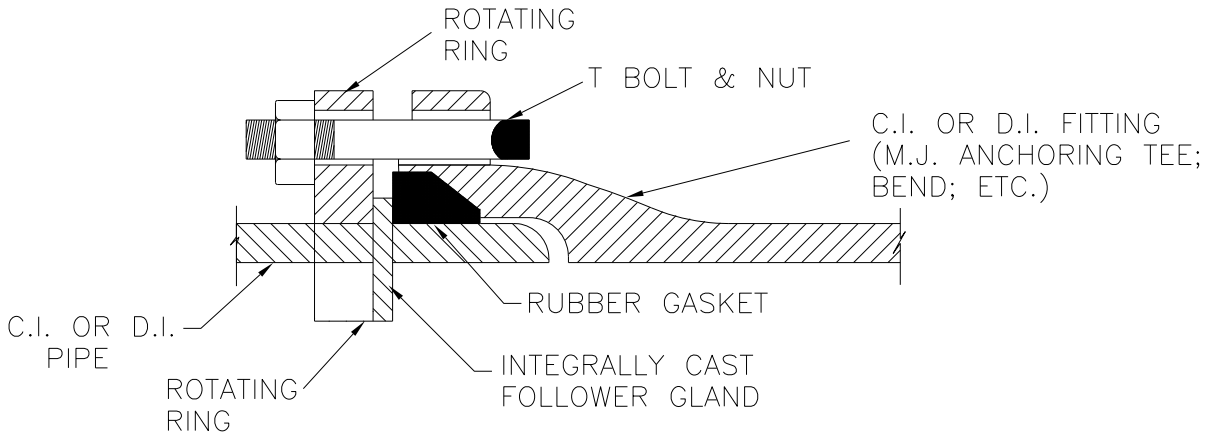

ANCHORING JOINT DETAIL

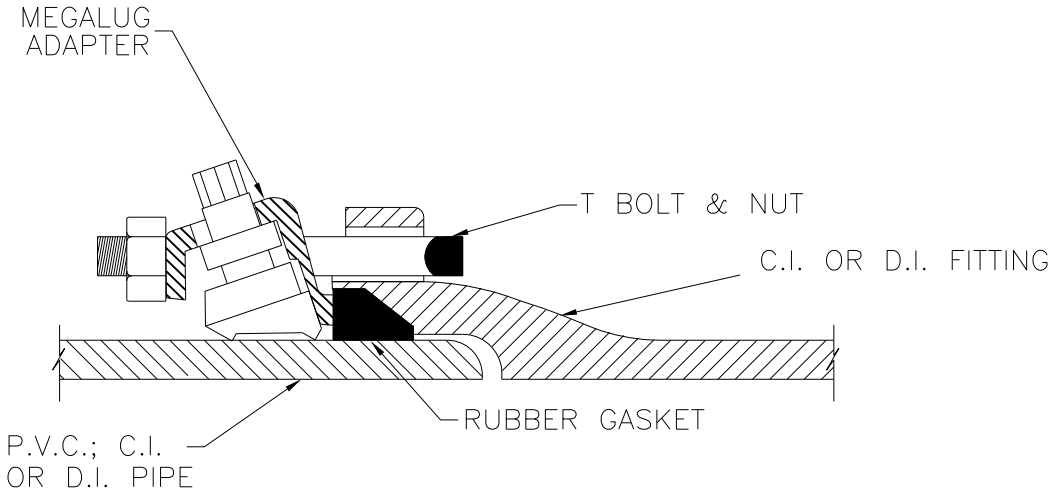

MECHANICAL JOINT DETAIL

ANCHOR/MECHANICAL JOINT	
CITY OF EULESS	
COE–AJ–1	01/15

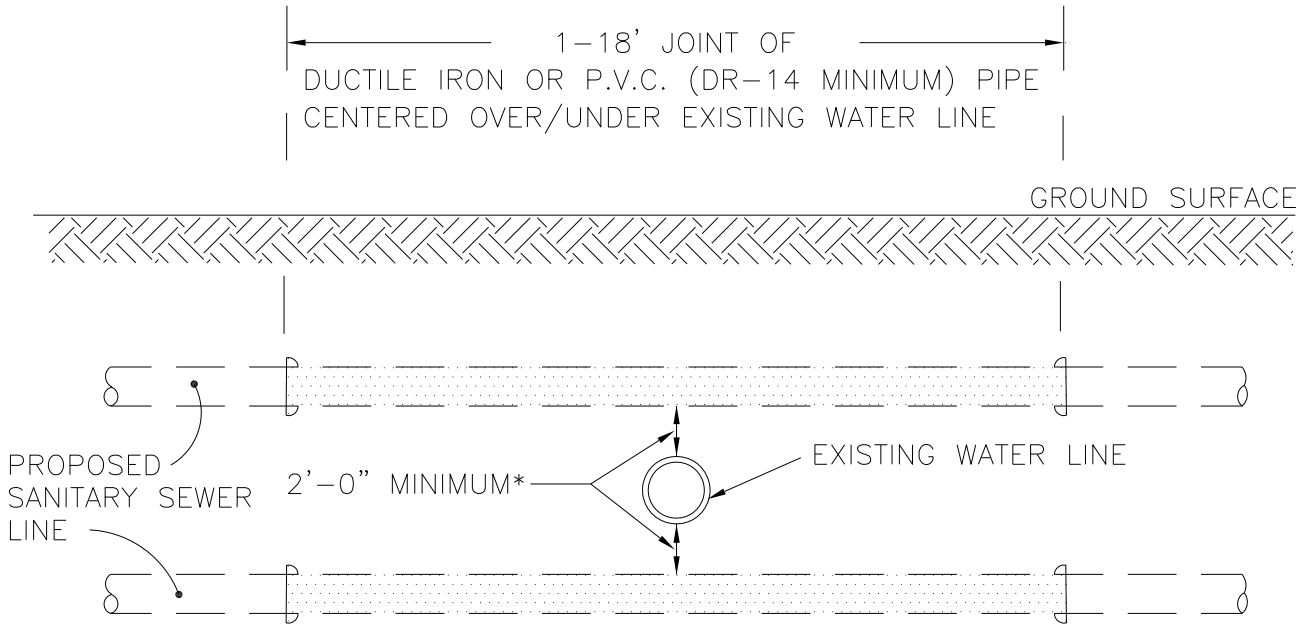

*WHEN 2' SEPARATION IS NOT POSSIBLE, PIER, CONCRETE, OR CASING WILL BE CONSIDERED WITH THE APPLICATION

SEPARATION REQUIREMENTS

-NO SCALE-

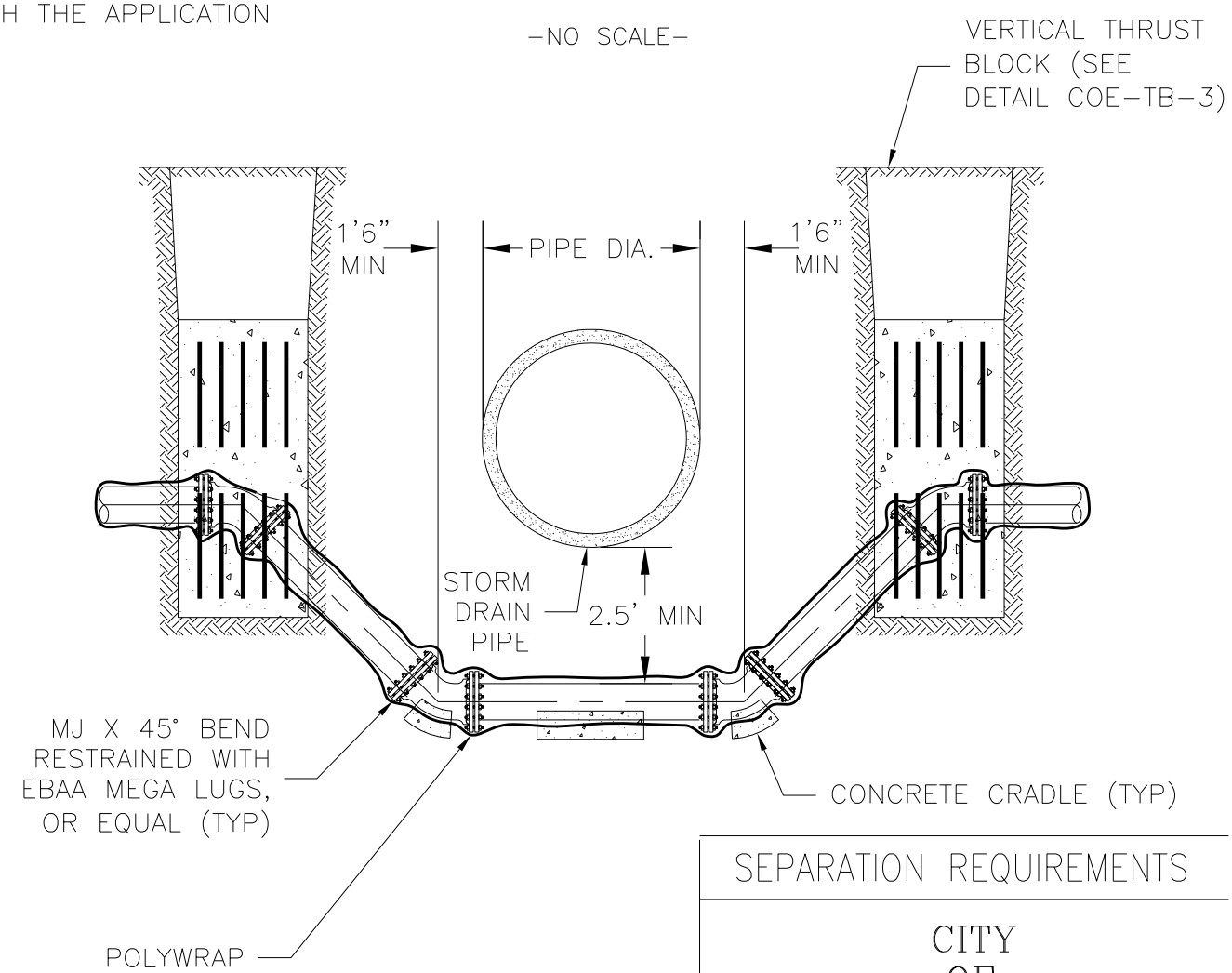

SEPARATION REQUIREMENTS	
CITY OF EULESS	
COE-US-1	01/15

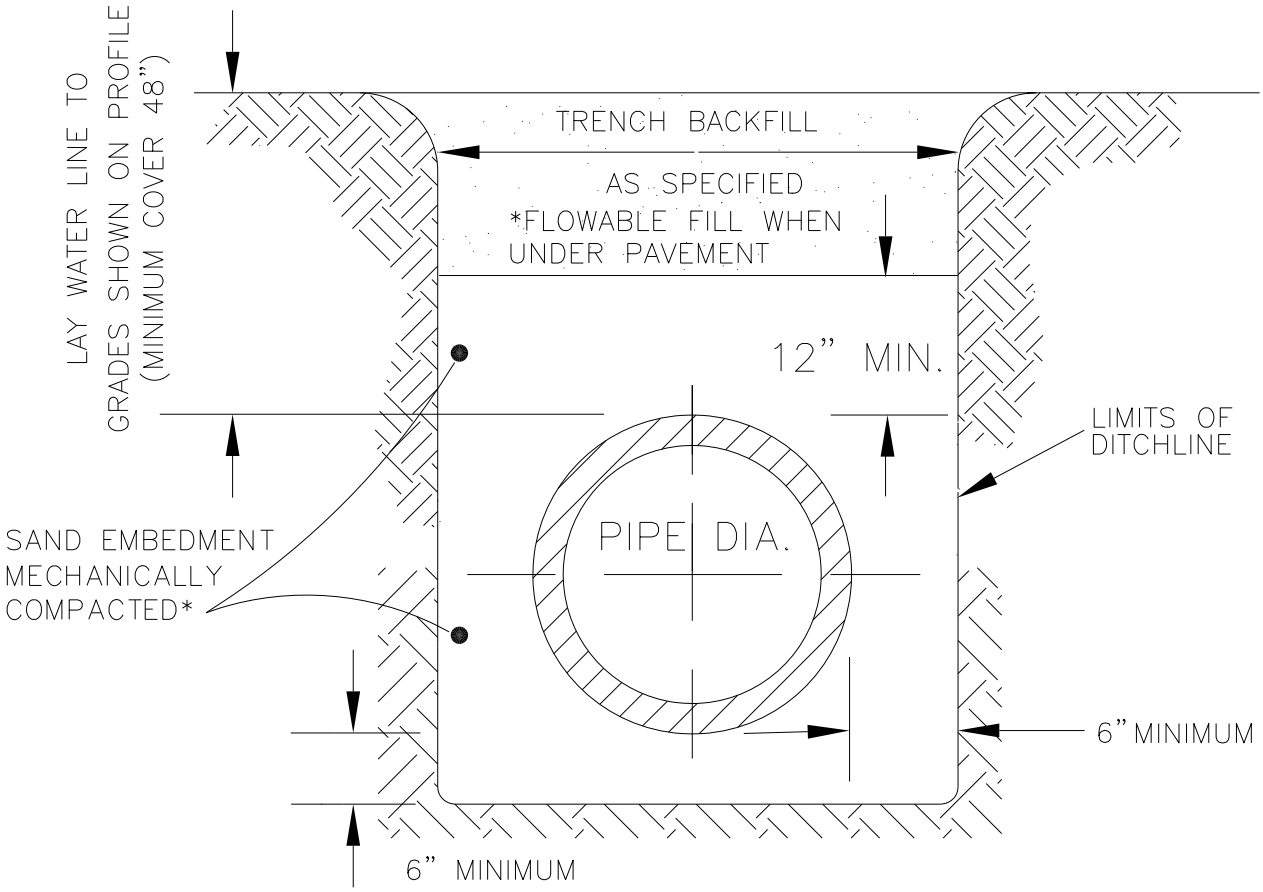

*SAND FOR EMBEDMENT SHALL BE FREE FLOWING MATERIAL WHICH CONTAINS NO CLAY, IS REASONABLY FREE FROM ORGANIC MATERIAL AND DOES NOT FORM A MUCK OR MUD WHEN WET. THE GRADATION SHALL BE SUCH THAT A MINIMUM OF 95% IS RETAINED ON A #100 SIEVE. THE P.I. OF THE SOIL FRACTION PASSING THE NO. 40 SIEVE SHALL NOT BE GREATER THAN FIVE (5).

WATER LINE EMBEDMENT DETAIL

-NO STD SCALE-

WATER LINE EMBEDMENT	
CITY OF EULESS	
COE-WLE	01/15

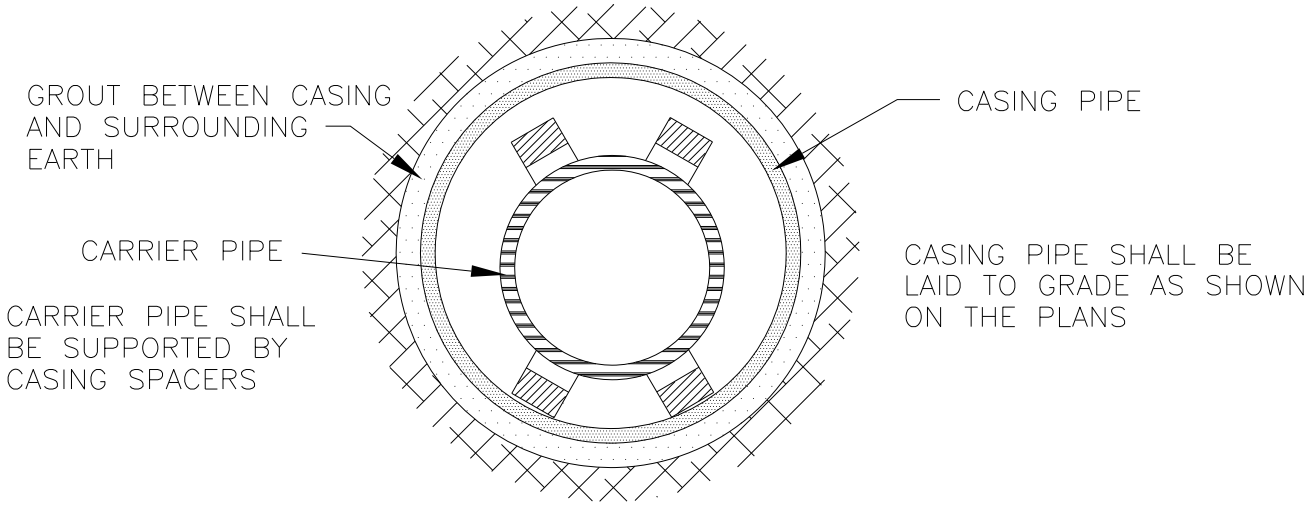

CASING DETAIL

-NO SCALE-

REQUIREMENTS FOR WATER LINE IN CASING:

1. WATER/SEWER LINES SHALL BE PLACED IN A CASING WHERE THE LINES ARE INSTALLED:
   A. UNDER EXISTING PERMANENT PAVEMENT ON STREETS WITH A CLASSIFICATION OF "COLLECTOR" OR HIGHER.
   B. CROSSING EXISTING OR PROPOSED HIGHWAY RIGHTS-OF-WAY.
   C. IN EASEMENTS BETWEEN HOUSES, BUILDING STRUCTURES, AND/OR OTHER CONFINED WORKING AREAS AS DETERMINED BY THE CITY ENGINEER.
2. ACCEPTABLE MATERIALS FOR USE AS CASINGS ARE REINFORCED CONCRETE PIPE (RCP); WELDED STEEL PIPE; AND CORRUGATED METAL PIPE (CMP). THE DESIGN ENGINEER SHALL DETERMINE AND SPECIFY ON THE PLAN DRAWINGS THE CASING MATERIAL TYPE, DIAMETER, METHOD OF INSTALLATION, AND OTHER PERTINENT INFORMATION REGARDING THE CASING PIPE.
3. THE CASING PIPE MAY BE INSTALLED BY JACKING, TUNNELING, BORING, OPEN CUT, ETC. THE METHOD USED SHALL BE DETERMINED BY THE DESIGN ENGINEER, SUBJECT TO THE APPROVAL OF THE CITY ENGINEER, AND SHALL BE SHOWN ON THE PLAN DRAWINGS.
4. CARRIER PIPE MAY BE POLYVINYL CHLORIDE (PVC), DUCTILE IRON (DI), CAST IRON (CI), OR CONCRETE PRESSURE PIPE (RCCP). THE TYPE OF CARRIER PIPE SHALL BE SPECIFIED ON THE PLANS.
5. CARRIER PIPE SHALL BE SUPPORTED IN THE CASING USING CASING SPACERS AS MANUFACTURED BY ADVANCED PRODUCTS AND SYSTEMS, INC., LAFAYETTE, LOUISIANA OR APPROVED EQUAL. SPACERS SHALL BE POLYETHYLENE (MODEL CI), STAINLESS STEEL (MODEL SSI), OR CARBON STEEL (MODEL SI), DEPENDENT ON THE MATERIAL AND DIAMETER OF THE CARRIER PIPE. CARBON STEEL SPACERS SHALL HAVE FUSION BONDED EPOXY OR PVC COATINGS. ALL SPACERS SHALL BE INSTALLED I.A.W. MANUFACTURER'S RECOMMENDATIONS.
6. CASING END SEALS: END SEALS FOR THE CASING SHALL BE 1/8-INCH THICK SYNTHETIC RUBBER SEALS SECURED TO THE CASING AND THE CARRIER PIPE WITH STAINLESS STEEL BANDING STRAPS WITH WORM GEAR MECHANISM. THE SEALS SHALL BE PULL-ON (MODEL AC), OR WRAP-AROUND (MODEL AS), ALL AS MANUFACTURED BY ADVANCED PRODUCTS AND SYSTEMS, OR AN APPROVED EQUAL.

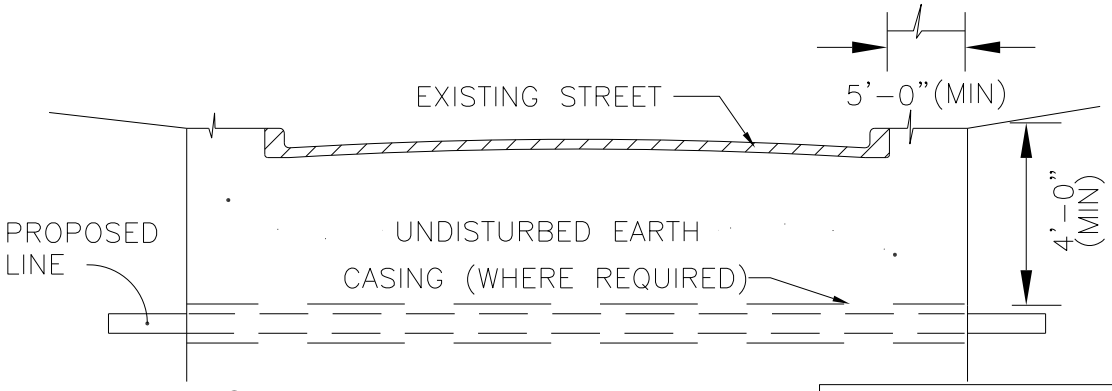

TYPICAL STREET BORE DETAIL

-NO SCALE-

NOTE:
SIZE OF THE BORE SHALL BE THE OPTION OF THE CONTRACTOR, UNLESS OTHERWISE SPECIFIED. PRESSURE GROUT AROUND THE CASING (WHERE USED) OR AROUND THE CARRIER PIPE WITH NO CASING.

CASING/BORE DETAIL

CITY OF EULESS

COE-CB-1 12/15

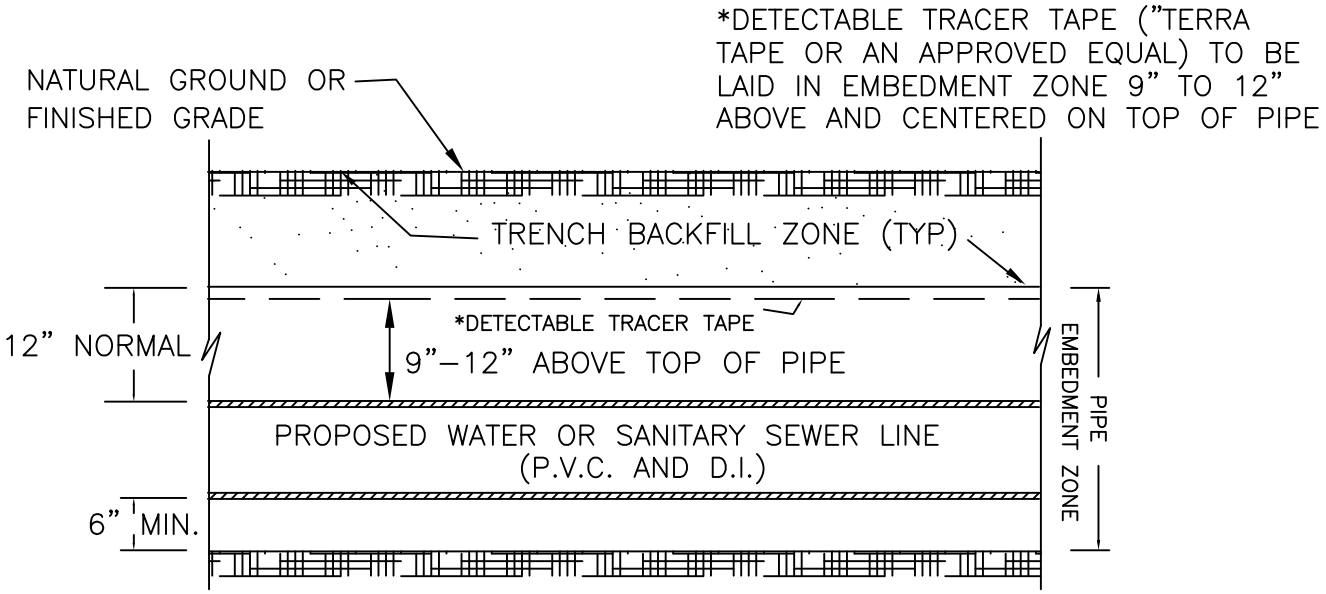

TRACER TAPE DETAIL

NO SCALE

TRACER TAPE DETAIL	
CITY OF EULESS	
COE–TT–1	2/99

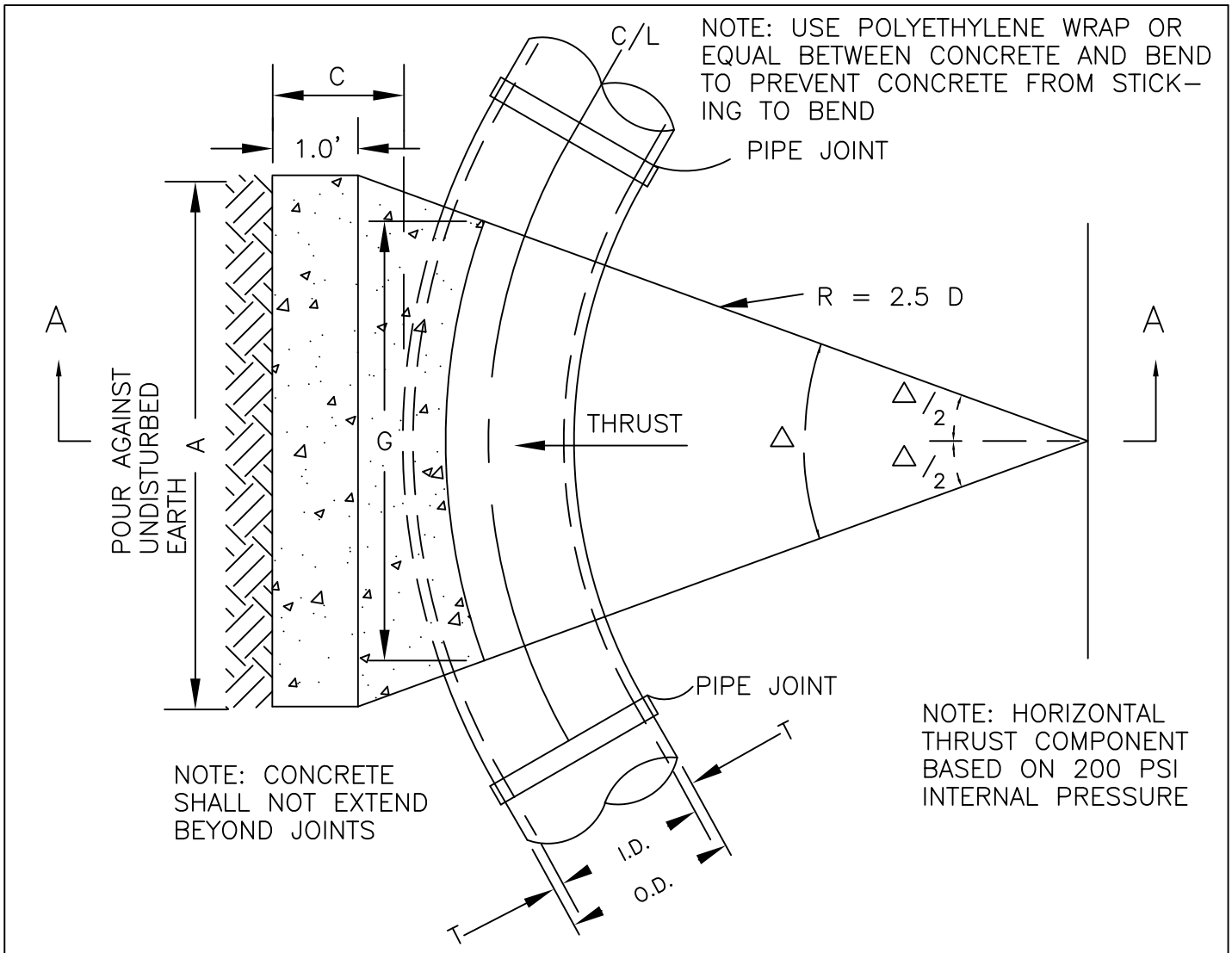

HORIZONTAL THRUST BLOCKS (BENDS)
DIMENSION "C" = 1.5 FT.

△ = 11.25°							△ = 22.5°				
I.D. (IN.)	E (FT.)	G (FT.)	THRUST (TONS)	A (FT.)	B (FT.)	VOL. (C.Y.)	G (FT.)	THRUST (TONS)	A (FT.)	B (FT.)	VOL. (C.Y.)
4,6,8	0.9	0.4	1.0	1.0	1.5	0.1	0.8	2.0	1.5	1.5	0.1
10,12	1.2	0.6	2.2	1.5	1.5	0.1	1.1	4.4	2.0	2.5	0.3

△ = 45.0°							△ = 90.0°				
I.D. (IN.)	E (FT.)	G (FT.)	THRUST (TONS)	A (FT.)	B (FT.)	VOL. (C.Y.)	G (FT.)	THRUST (TONS)	A (FT.)	B (FT.)	VOL. (C.Y.)
4,6,8	0.9	1.5	3.9	2.0	2.0	0.2	2.7	7.1	5.0	1.5	0.4
10,12	1.2	2.2	8.7	3.5	2.5	0.5	4.0	16.0	6.5	2.5	1.0

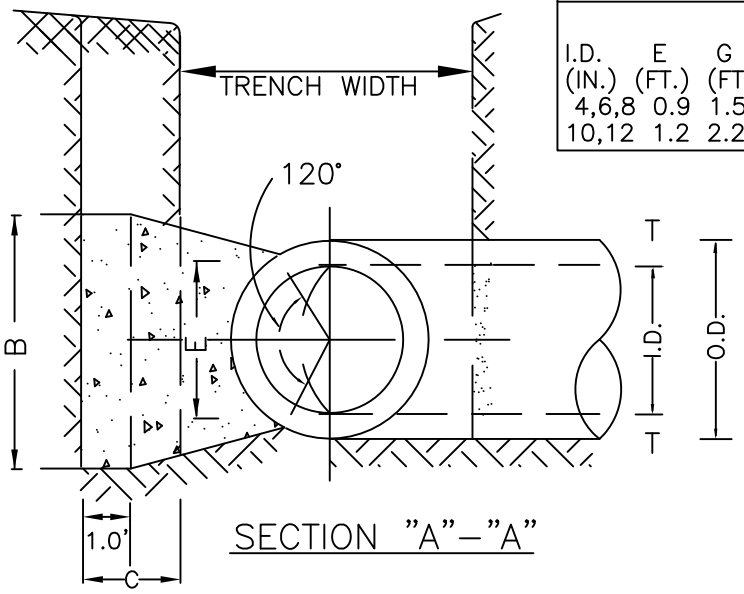

HORIZONTAL THRUST BLOCK

CITY OF EULESS

COE–TB–1 2/99

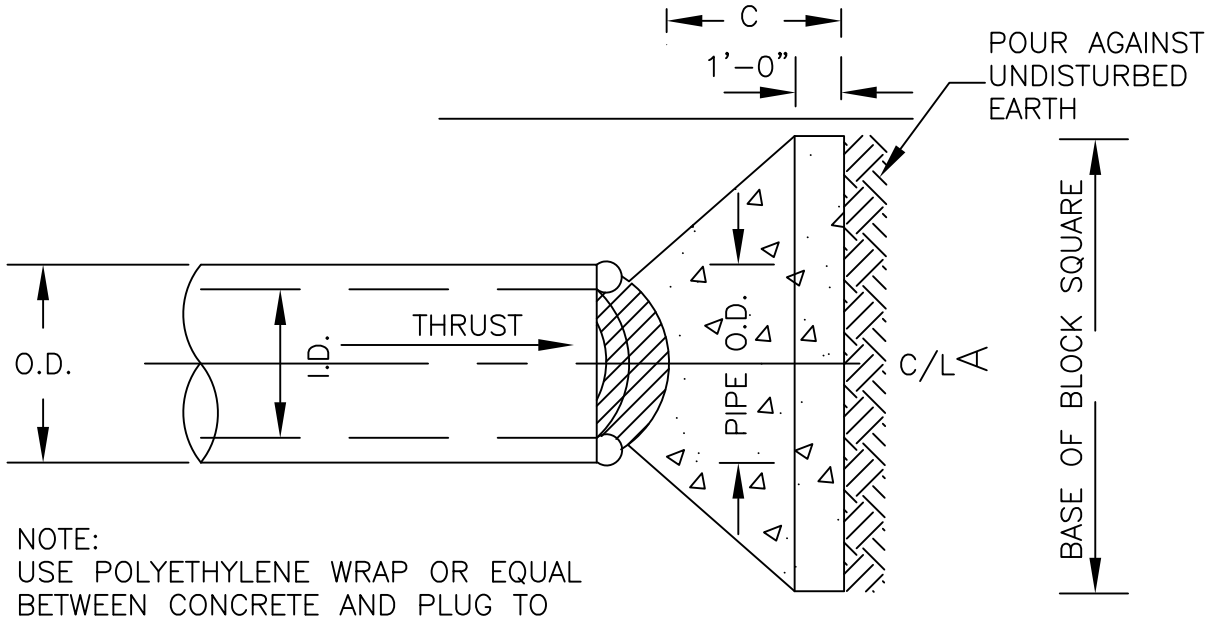

NOTE:
USE POLYETHYLENE WRAP OR EQUAL BETWEEN CONCRETE AND PLUG TO PREVENT CONCRETE FROM STICKING TO PLUG

PLAN OF PLUG THRUST BLOCK

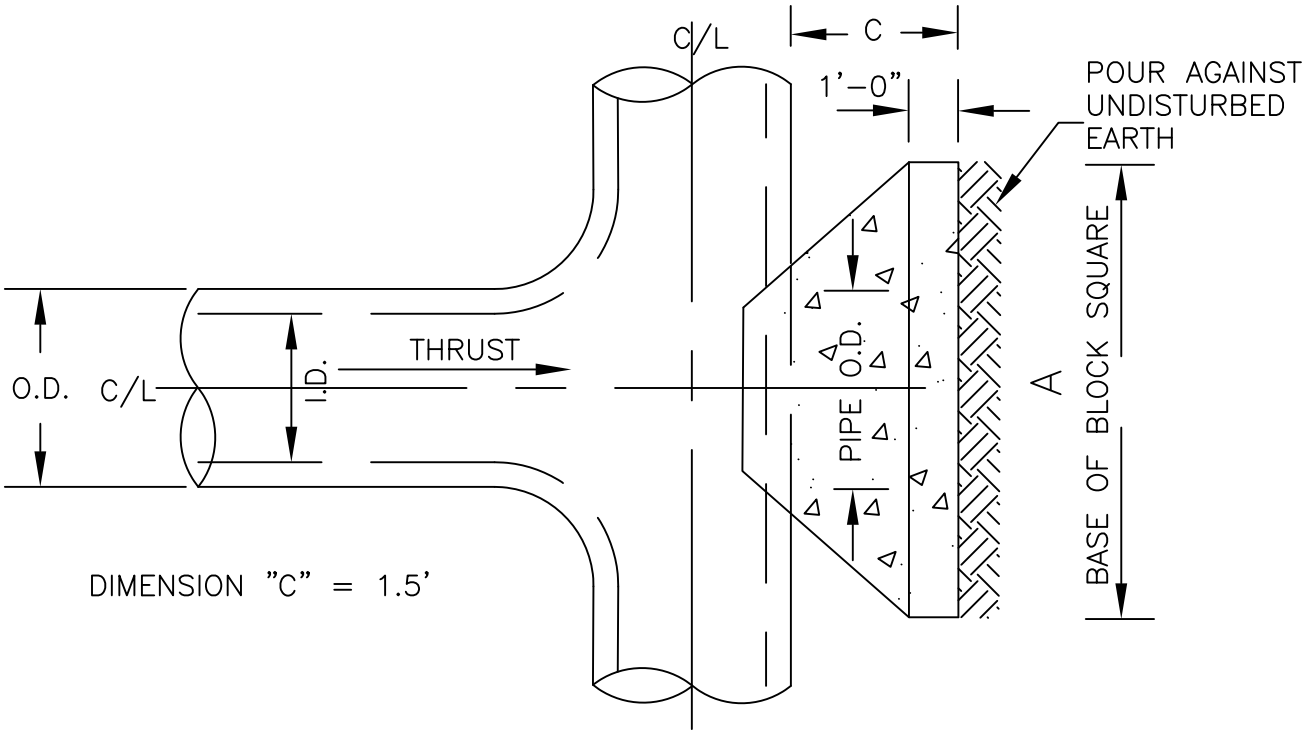

PLAN OF TEE THRUST BLOCK

THRUST BLOCKS FOR PLUGS AND TEES*			
I.D.(in)	THRUST (TONS)	A(FT)	VOL(C.Y.)
4,6,8,	5.1	2.5	0.3
10,12	11.3	3.5	0.6

*FOR PIPE SIZES IN EXCESS OF 12" IN DIAMETER A SPECIAL THRUST BLOCK WILL BE REQUIRED

PLUG/TEE THRUST BLOCK

CITY
OF
EULESS

COE-TB-2 2/99

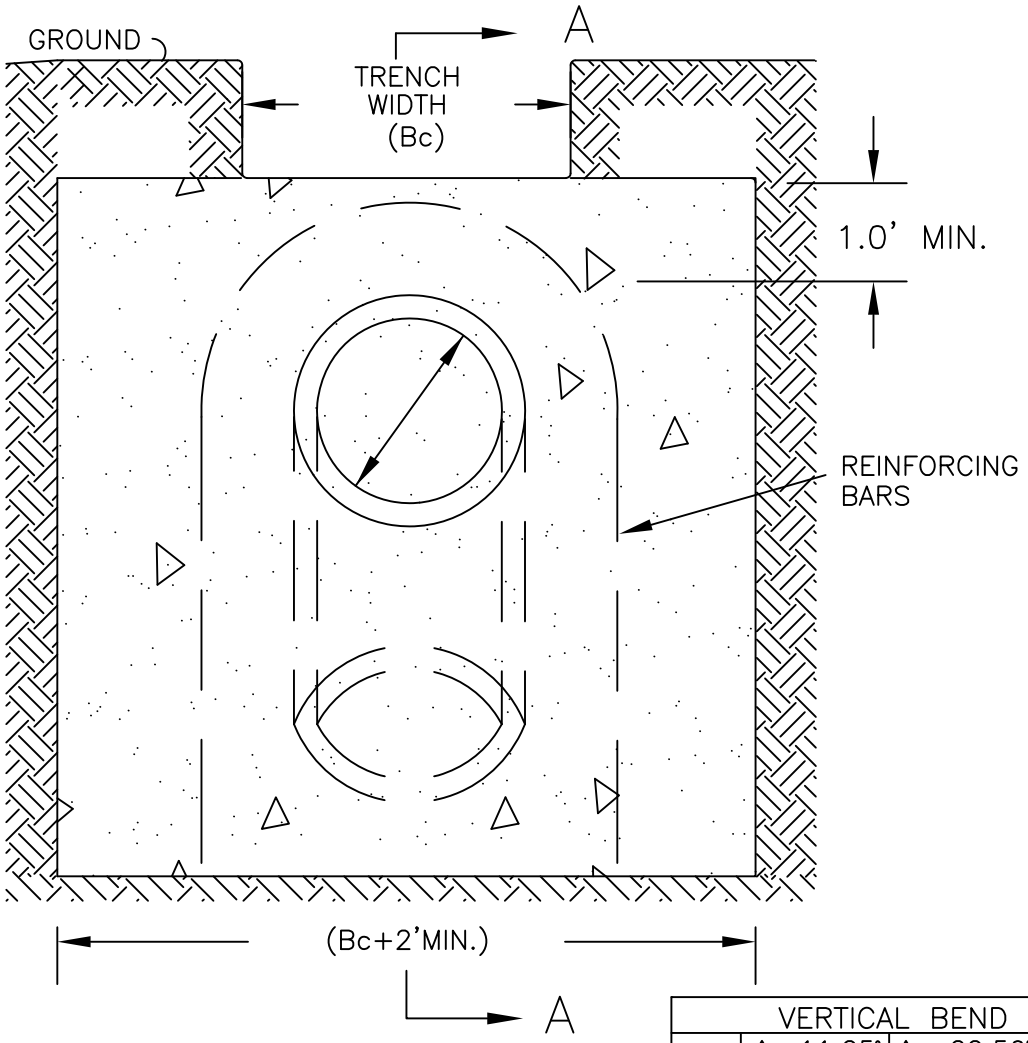

VERTICAL BEND THRUST BLOCK								
I.D. (IN)	Δ=11.25°		Δ =22.50°		Δ =45.00°		Δ =90.00°	
	THRUST (TONS)	VOL (CY)	THRUST (TONS)	VOL (CY)	THRUST (TONS)	VOL (CY)	THRUST (TONS)	VOL (CY)
4,6,8,	1.0	0.5	2.0	1.0	3.6	1.8	5.0	2.5
10,12	2.2	1.1	4.3	2.2	8.0	4.0	11.3	5.7

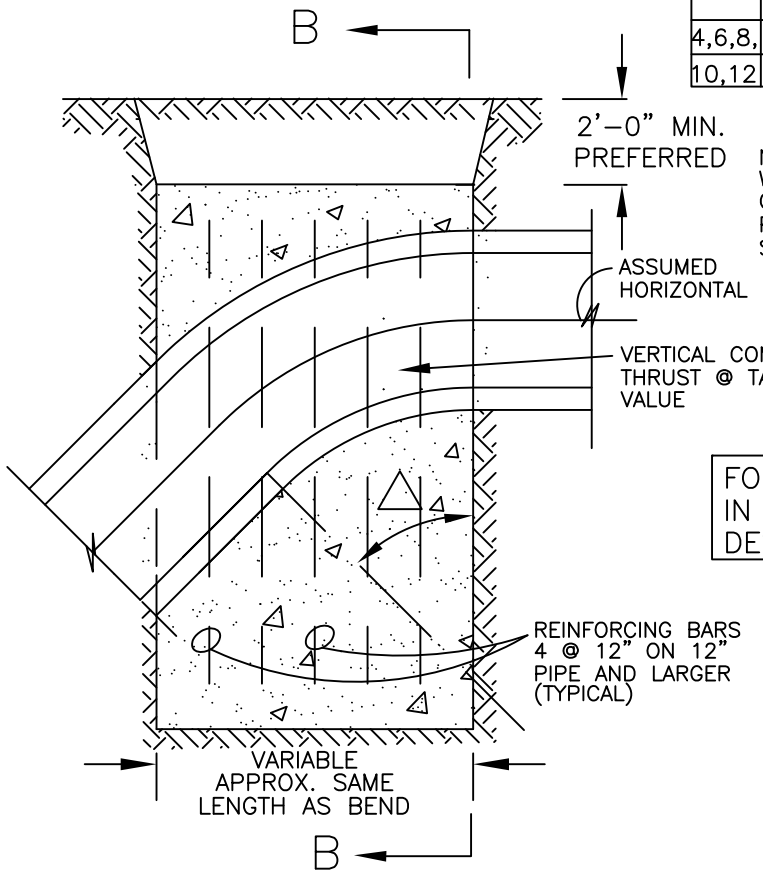

NOTE: USE POLYETHYLENE WRAP OR EQUAL BETWEEN CONCRETE AND BEND TO PREVENT CONCRETE FROM STICKING TO BEND

FOR PIPE SIZES IN EXCESS OF 12" IN DIAMETER A SPECIAL THRUST BLOCK DESIGN WILL BE REQUIRED

VERTICAL BEND THRUST BLOCK

CITY
OF
EULESS

COE-TB-3 2/99

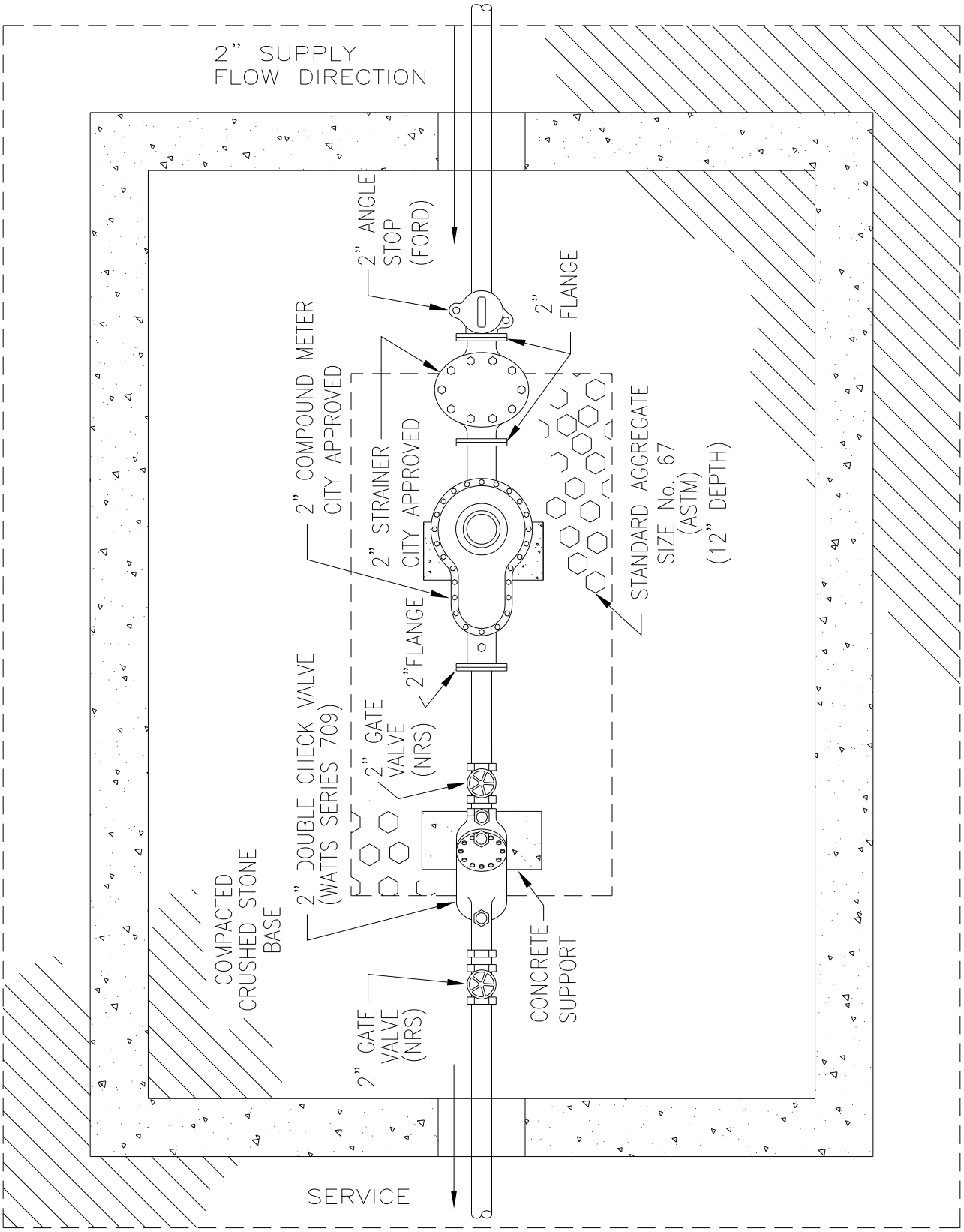

PLAN VIEW

-NO SCALE-

2-INCH METER VAULT

CITY
OF
EULESS

COE-MV-1 01/15

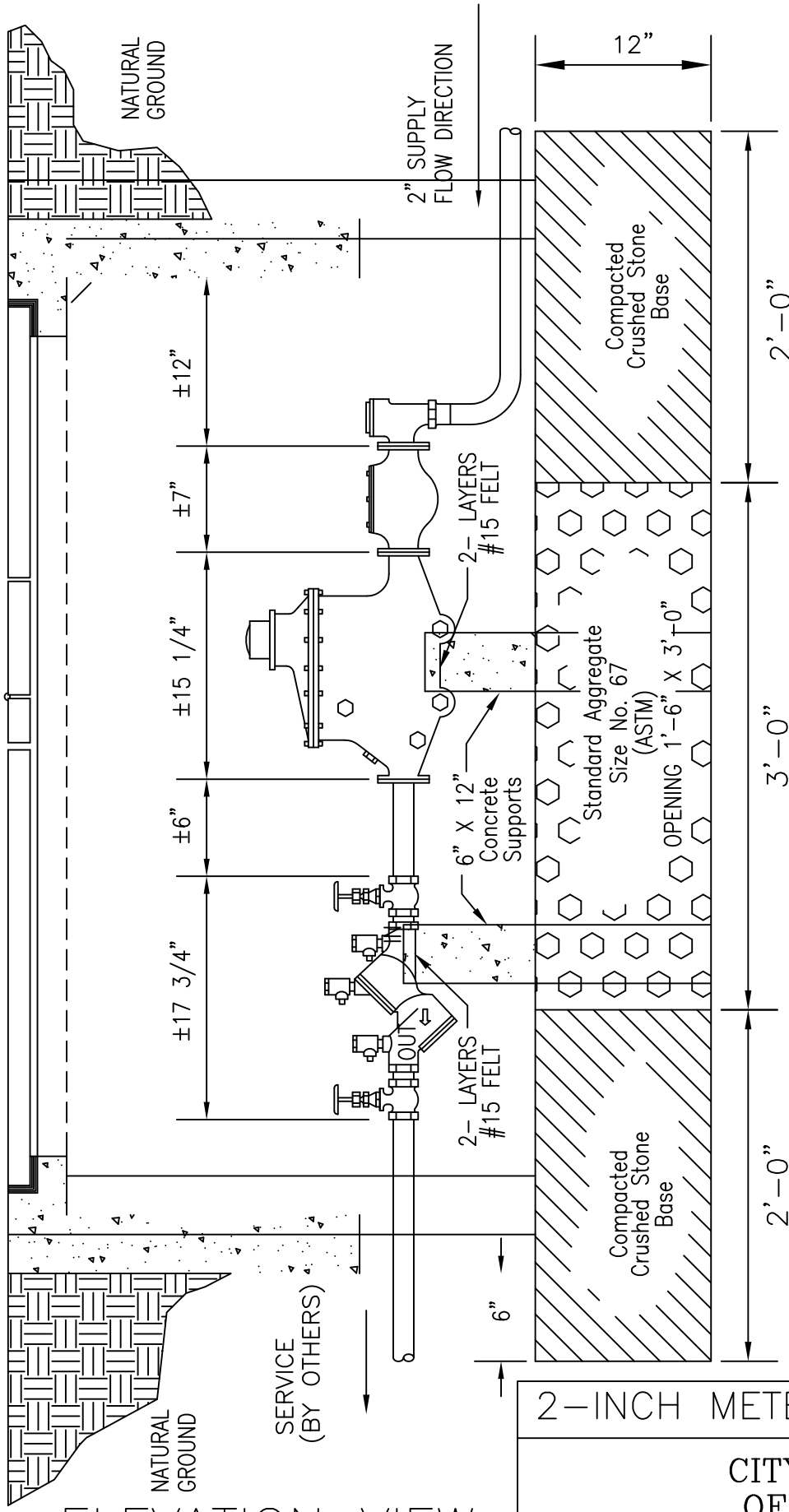

ELEVATION VIEW

-NO SCALE-

2-INCH METER VAULT

CITY OF EULESS

COE-MV-2

2/99

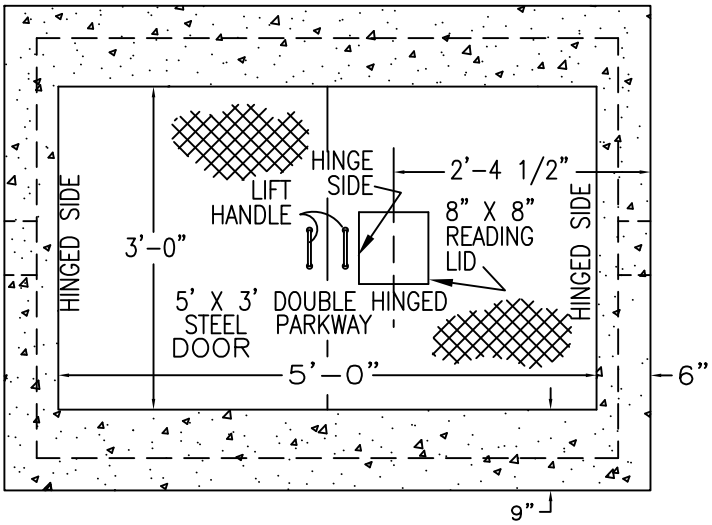

PLAN VIEW

ALL METAL SHALL BE PAINTED
(SEE SHEET 5 OF 5)

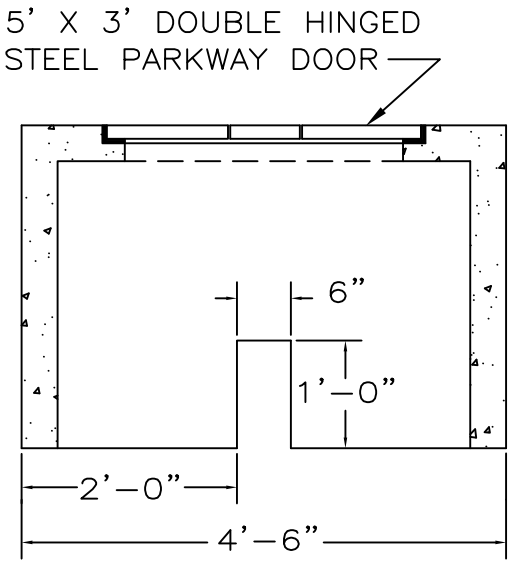

END VIEW

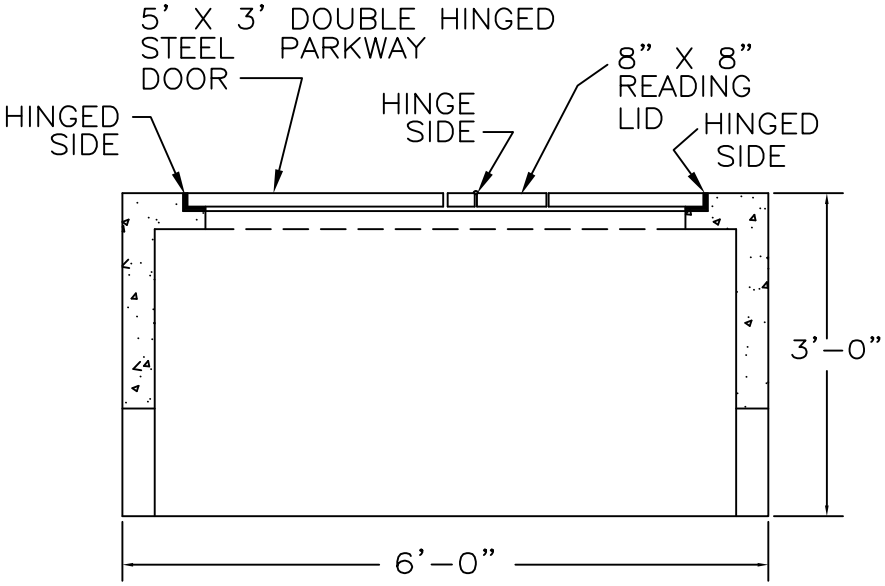

ELEVATION

PRECAST CONCRETE METER VAULT
BROOKS PRODUCTS, INC.
(BROOKS-466-800-3)
OR APPROVED EQUAL

2-INCH METER VAULT	
CITY OF EULESS	
COE-MV-3	2/99

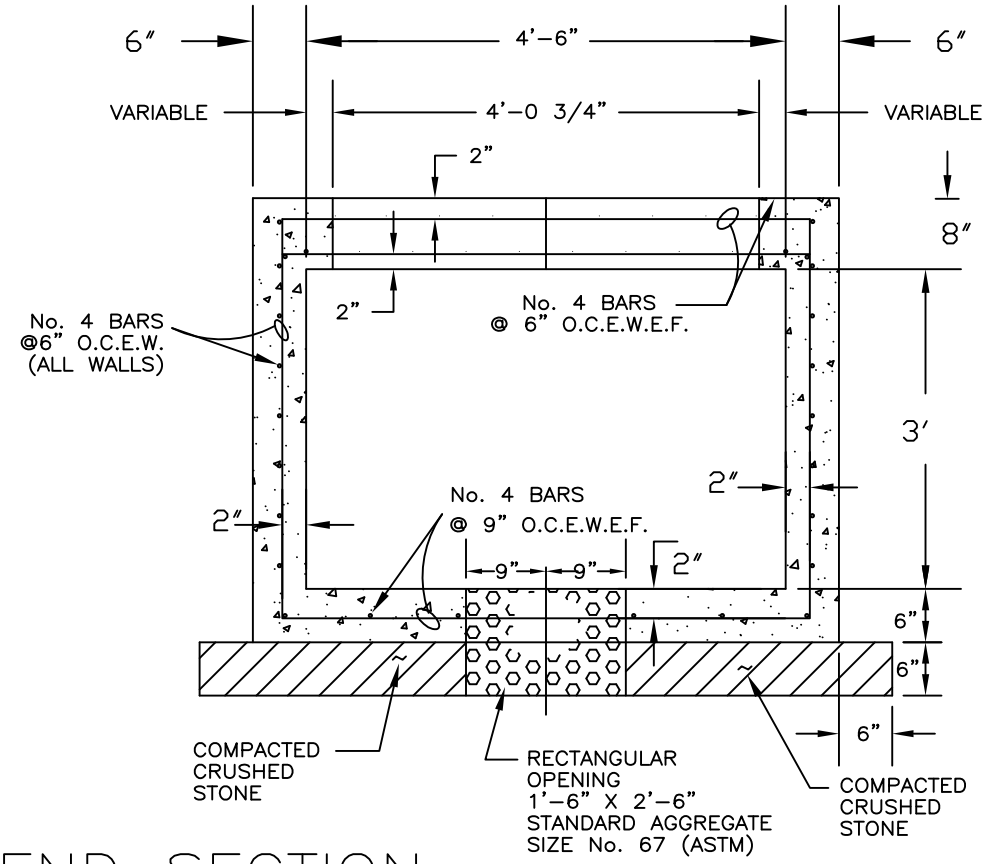

END SECTION

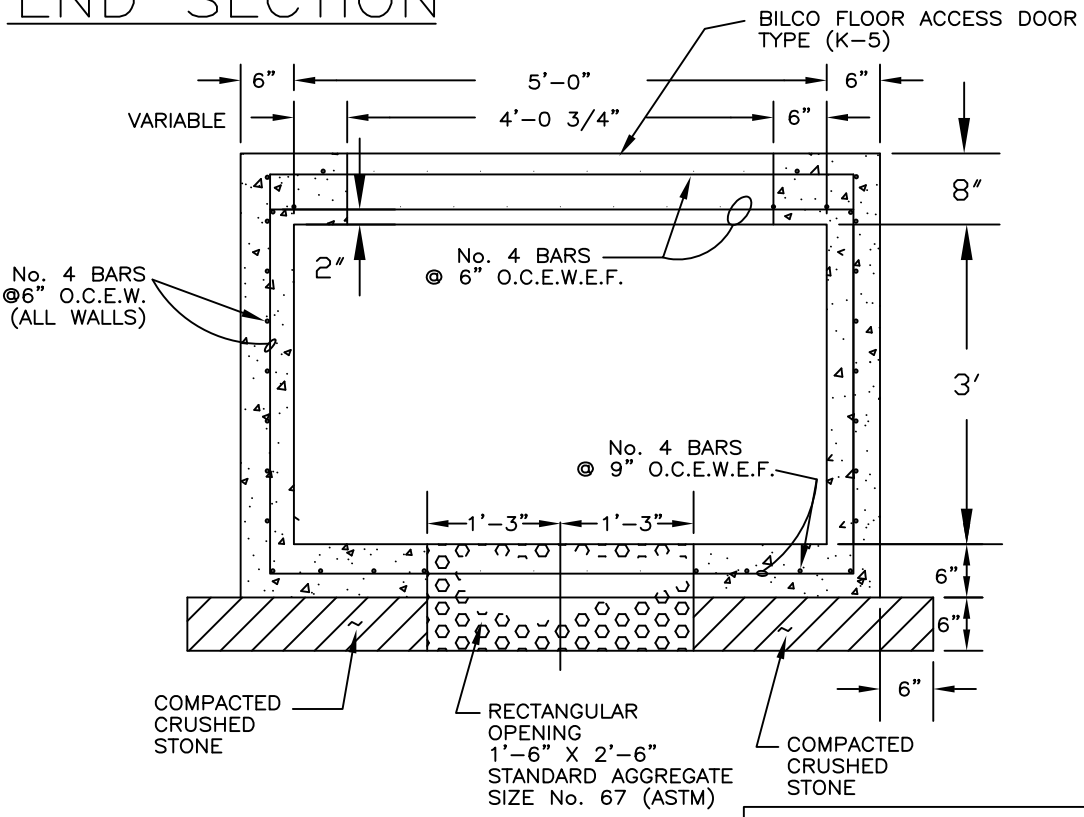

ELEVATION

CAST IN PLACE
CONCRETE METER VAULT

2–INCH METER VAULT

CITY
OF
EULESS

COE–MV–4 2/99

MATERIALS FOR 2-INCH WATER SERVICES:

1- 2" ANGLE STOP (FORD FV 43-777W)*
1- 2" SRH COMPOUND METER (CITY APPROVED) WITH 2" OVAL FLANGES
1- 2" STRAINER (CITY APPROVED) WITH 2" OVAL FLANGES
1- 2" OVAL FLANGE (JONES J-129M)*, 2"x 6" + THREADED NIPPLE
1- 2" DOUBLE CHECK VALVE-BACKFLOW PREVENTION DEVICE (WATTS SERIES NO. 709)*WITH 2" GATE VALVES (NRS)
1- 2" NIPPLE 12" LONG
1- 4'-6"x 6'-0" PRECAST CONCRETE METER VAULT (BROOKS MV-466-800-3)*WITH 3'x 5' DOUBLE HINGED STEEL PARKWAY COVER AND 8"x 8" HINGED READING LID (OPTIONAL: CAST-IN-PLACE VAULT)
32 C.F. CRUSHED STONE FOR VAULT FOUNDATION
4.5 C.F. OF STANDARD AGGREGATE SIZE NO. 67 FOR FLOOR OF METER VAULT
* AS SPECIFIED OR APPROVED EQUAL

PAINTING OF METAL DOORS ON METER VAULT:

THE METAL DOORS ON THE METER VAULT SHALL BE CLEANED AND PAINTED FOLLOWING INSTALLATION AND PRIOR TO ACCEPTANCE OF THE IMPROVEMENTS BY THE CITY OF EULESS.

ALL METAL SURFACES TO RECEIVE PAINT SHALL BE CLEANED TO REMOVE LOOSE MILL SCALE, RUST, DIRT, OIL, GREASE, AS WELL AS ALL OTHER FOREIGN SUBSTANCES WHICH WOULD BE DELETERIOUS TO THE PROCUREMENT OF A FIRM PAINT COATING. ANY EFFECTIVE METHOD FOR CLEANING INCLUDING SANDBLASTING, HAND OR ROTATING METAL BRUSHES, SCRAPERS, CHISELS, HAMMERS OR OTHER EFFECTIVE MEANS SHALL BE ACCEPTABLE. PARTICULAR ATTENTION SHALL BE GIVEN TO CLEANING FILLETS, BOLT HEADS, NUTS, WASHERS, DRILLED OR PUNCHED HOLES, AND WELDS.

FOLLOWING CLEANING OF THE METAL SURFACES, ONE COAT OR RED OXIDE WITH ZINC CHROMATE PRIMER SHALL BE APPLIED I.A.W. THE DIRECTIONS OF THE PAINT MANUFACTURER. THE PRIMER SHALL BE "KELGUARD RED OXIDE PRIMER - SERIES 1710 AS MANUFACTURED BY KELLY-MOORE PAINT COMPANY OR AN APPROVED EQUAL.

THE FINISH PAINT COAT SHALL CONSIST OF TWO (2) APPLICATIONS OF A RUST INHIBITIVE ENAMEL APPLIED I.A.W. THE DIRECTIONS OF THE PAINT MANUFACTURER. AN AVERAGE DRY FILM THICKNESS OF 1.5 MILS FOR EACH COAT OF PAINT APPLIED IS REQUIRED. THE FINISH COAT SHALL BE "KELGUARD RUST INHIBITIVE ENAMEL - SERIES 1700" AS MANUFACTURED BY KELLY-MOORE PAINT COMPANY OR AN APPROVED EQUAL. COLOR OF THE FINISH COAT SHALL BE LIGHT GREEN. THE CONTRACTOR SHALL PROVIDE COLOR CHIPS OR PAINT SAMPLES TO THE CITY ENGINEER FOR APPROVAL PRIOR TO APPLICATION OF THE FINISH COATS.

2-INCH METER VAULT	
CITY OF EULESS	
COE-MV-5	01/15

NOTE:
IF SERVICE IS INSTALLED AHEAD OF CURB & GUTTER, CUT AND SHAPE PIPE TO FIT POSITION SHOWN BUT BEND DOWN ABOUT 5 INCHES TO MINIMIZE CHANCES OF DAMAGE DURING CONSTRUCTION OF CURB AND GUTTER. SERVICE LINE COVER MINIMUM 24 INCHES, UNDER STREET SUBGRADE.

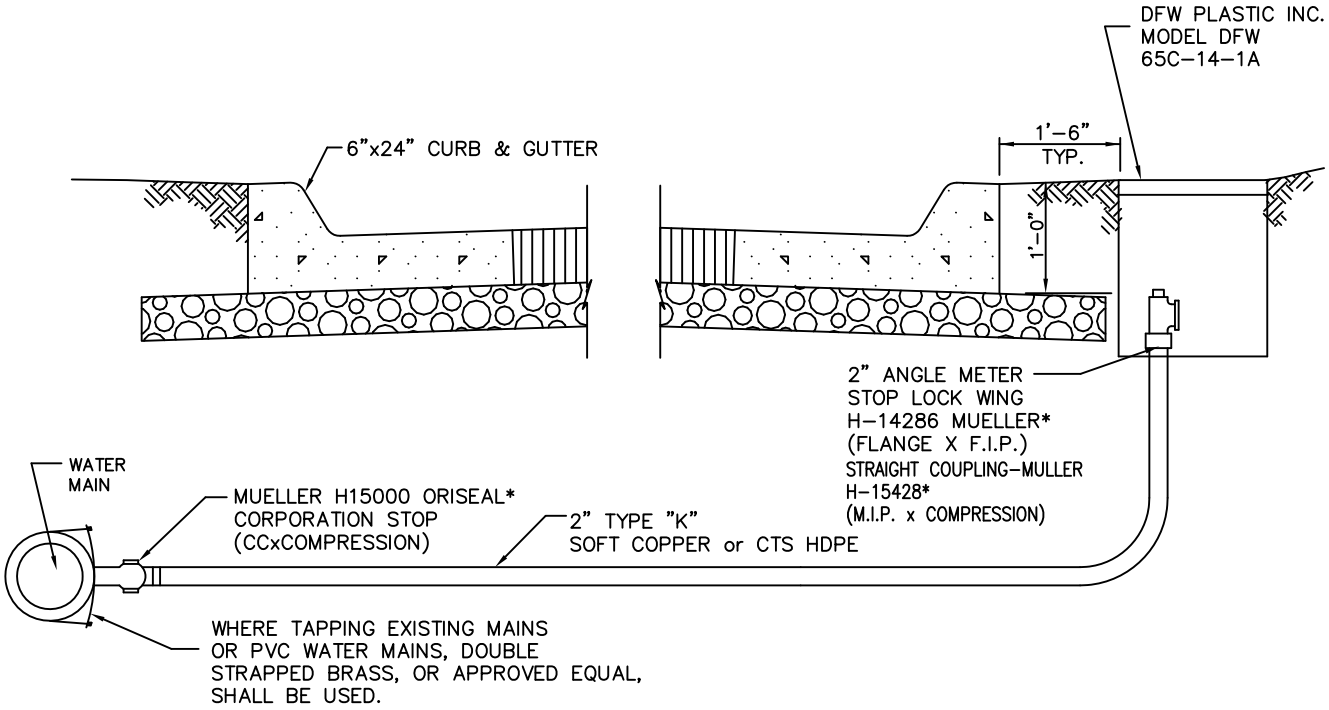

DETAIL FOR 2" WATER SERVICE

-NO STD SCALE-

* OR APPROVED EQUAL

2" ALTERNATE WATER SERVICE		
	CITY OF EULESS	
COE-AWS		03/16

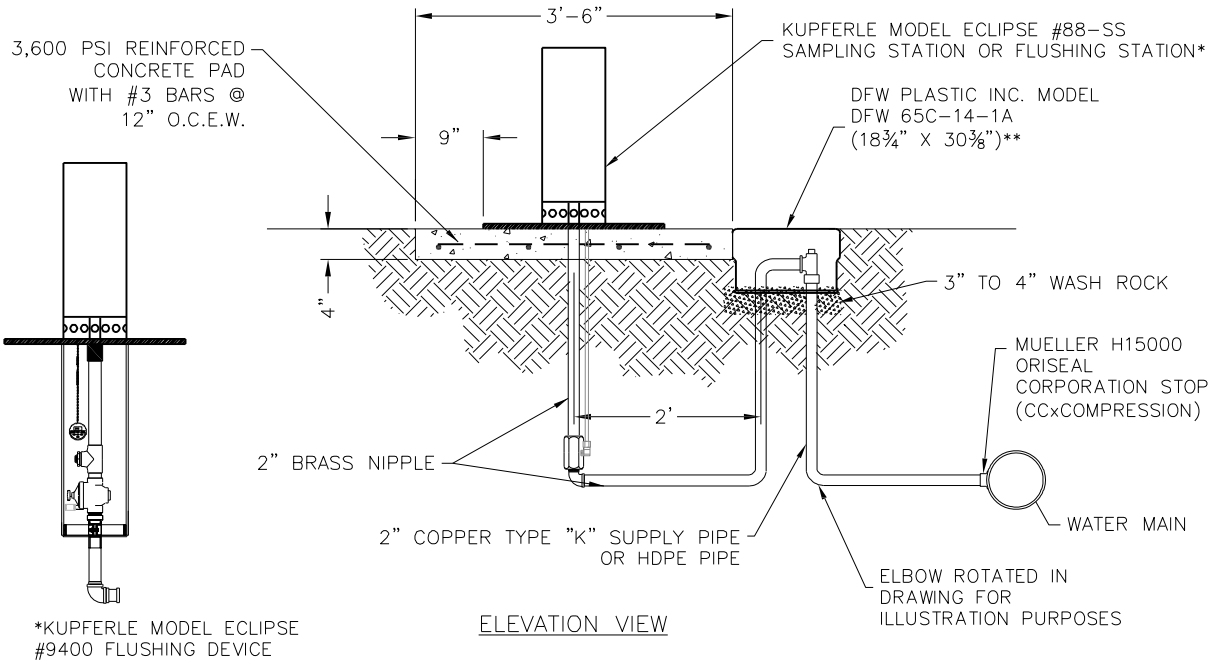

ELEVATION VIEW

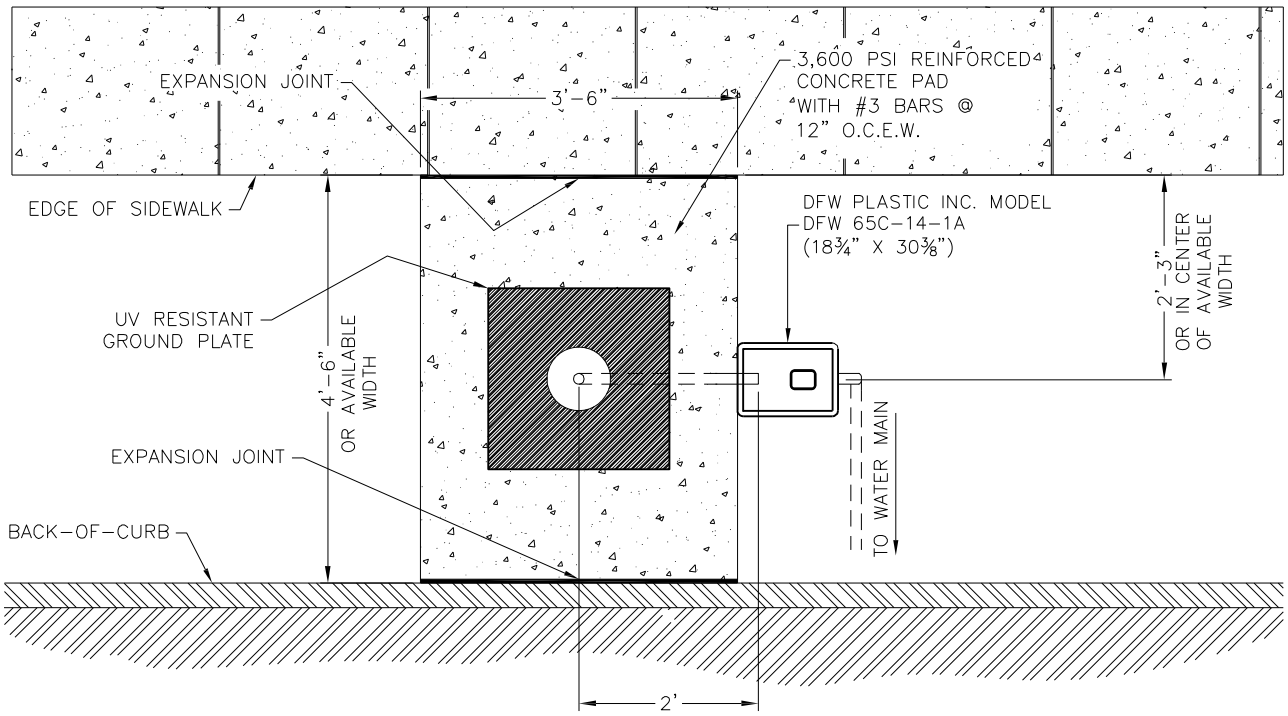

PLAN VIEW

NOTES:

1. EMBEDMENT FROM MAIN TO CURB VALVE SHALL MEET STANDARD CITY EMBEDMENT REQUIREMENTS.
2. BACKFILL TO BE COMPACTED IN 6" LIFTS.
3. MATERIALS SHALL COMPLY WITH CITY DETAIL COE-AWS (2" ALTERNATE WATER SERVICE).
4. **2" ANGLE METER STOP LOCK WING H-14286 MUELLER OR EQUAL (FLANGE X F.I.P.). STRAIGHT COUPLING, OR EQUAL. MUELLER-H-15428 OR EQUAL (M.I.P. X COMPRESSION).

FLUSHING/SAMPLING STATION

CITY OF EULESS

COE-FSS-1 7/15

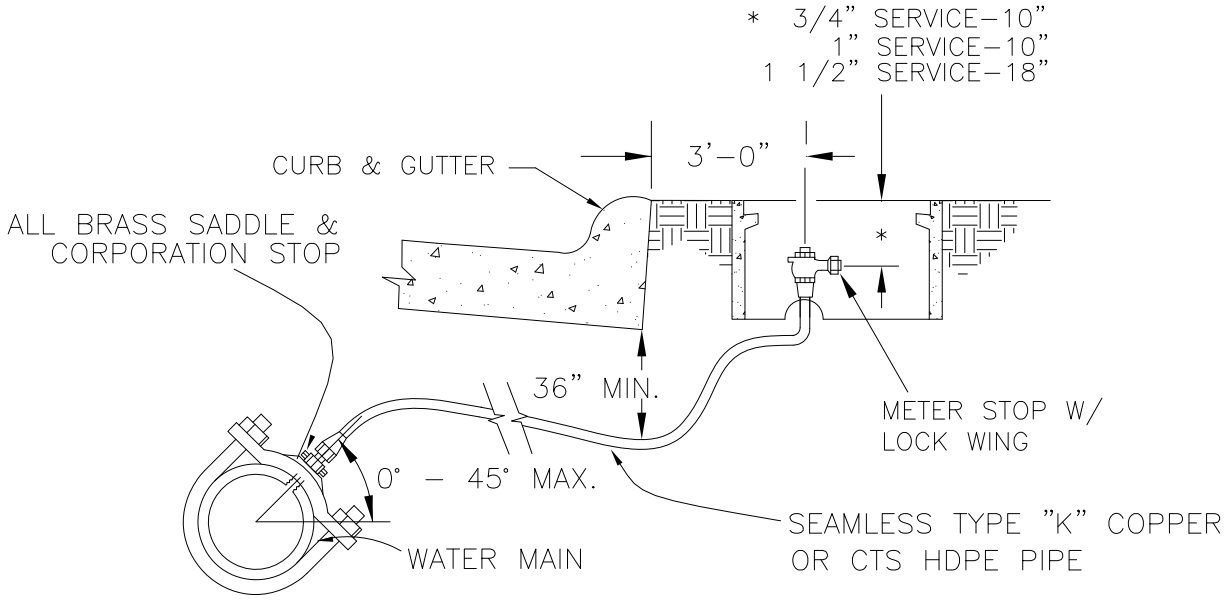

TYPICAL SERVICE CONNECTION DETAIL

–NO SCALE–

ITEM	3/4" SERVICE	1" SERVICE	1 1/2" SERVICE
CORPORATION STOP	1 H–15000	1 H–15000	1 H–15000
METER STOP	1 H–14255	1 H–14255	1 H–14276
**METER BOX	36–H	37–H	38–H
***METER BOX	DFW 37C–12–1A		DFW 65C–14–1A

**PRE–CAST METER BOX MANUFACTURED BY BROOKS PRODUCTS INC.
***PLASTIC METER BOX MANUFACTURED BY DFW PLASTIC INC. OR APPROVED EQUAL.

NOTES

1. WHERE TAPPING EXISTING MAINS OR PVC WATER MAINS, DOUBLE STRAPPED BRASS, OR APPROVED EQUAL, SHALL BE USED.
2. WATER SERVICE LATERALS SHALL BE CONTINUOUS WITH NO JOINTS FROM CORP. STOP TO QUARTER BEND.
3. ALL COPPER FITTINGS SHALL BE COMPRESSION FITTINGS.
4. ALL TAPS SHALL BE 1" MINIMUM.
5. METERS SHALL NOT BE INSTALLED WITHIN EXISTING OR PROPOSED SIDEWALKS OR DRIVEWAYS

TYPICAL SERVICE CONNECTION

CITY
OF
EULESS

COE–TSC1 3/16

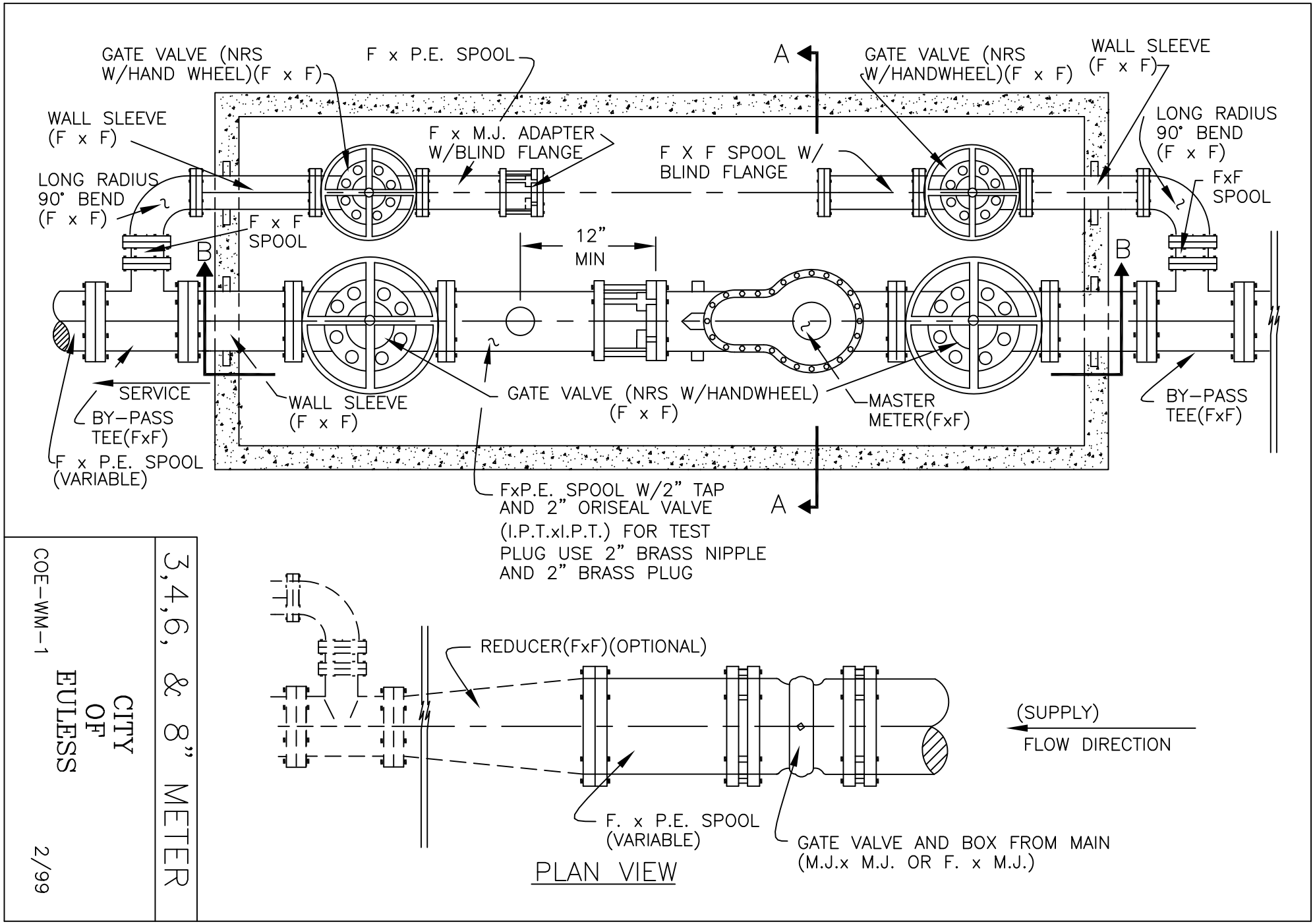
GATE VALVE (NRS W/HAND WHEEL)(F x F)
F x P.E. SPOOL
A
GATE VALVE (NRS W/HANDWHEEL)(F x F)
WALL SLEEVE (F x F)
WALL SLEEVE (F x F)
F x M.J. ADAPTER W/BLIND FLANGE
F X F SPOOL W/ BLIND FLANGE
LONG RADIUS 90° BEND (F x F)
LONG RADIUS 90° BEND (F x F)
FxF SPOOL
F x F SPOOL
12" MIN
B
B
SERVICE
BY-PASS TEE(FxF)
F x P.E. SPOOL (VARIABLE)
WALL SLEEVE (F x F)
GATE VALVE (NRS W/HANDWHEEL) (F x F)
MASTER METER(FxF)
BY-PASS TEE(FxF)
FxP.E. SPOOL W/2" TAP AND 2" ORISEAL VALVE (I.P.T.xI.P.T.) FOR TEST PLUG USE 2" BRASS NIPPLE AND 2" BRASS PLUG
A
REDUCER(FxF)(OPTIONAL)
(SUPPLY)
FLOW DIRECTION
F. x P.E. SPOOL (VARIABLE)
GATE VALVE AND BOX FROM MAIN (M.J.x M.J. OR F. x M.J.)
PLAN VIEW
3,4,6, & 8" METER
CITY OF EULESS
COE-WM-1
2/99

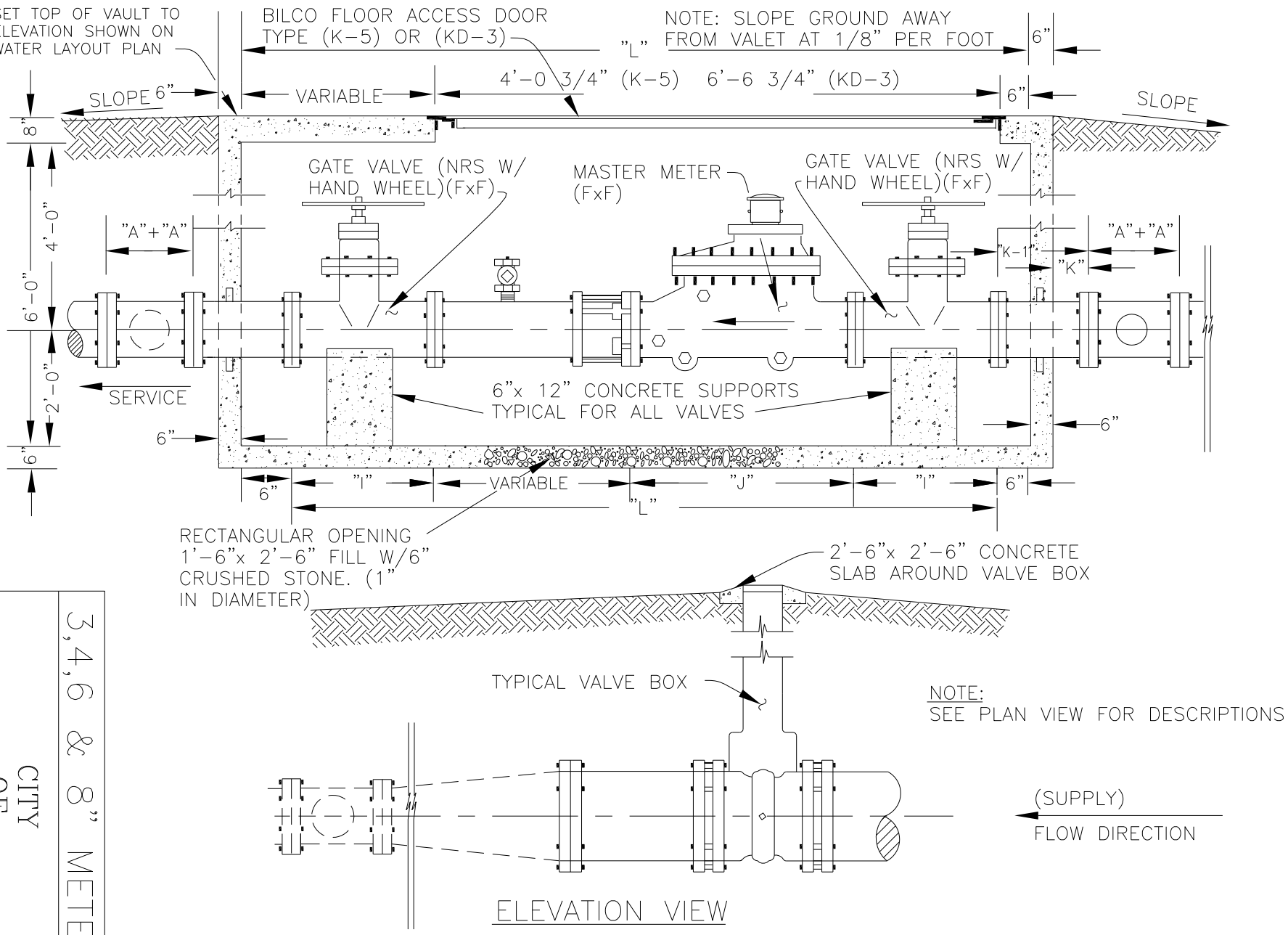

3,4,6 & 8" METER

CITY OF EULESS

COE-WM-2

01/15

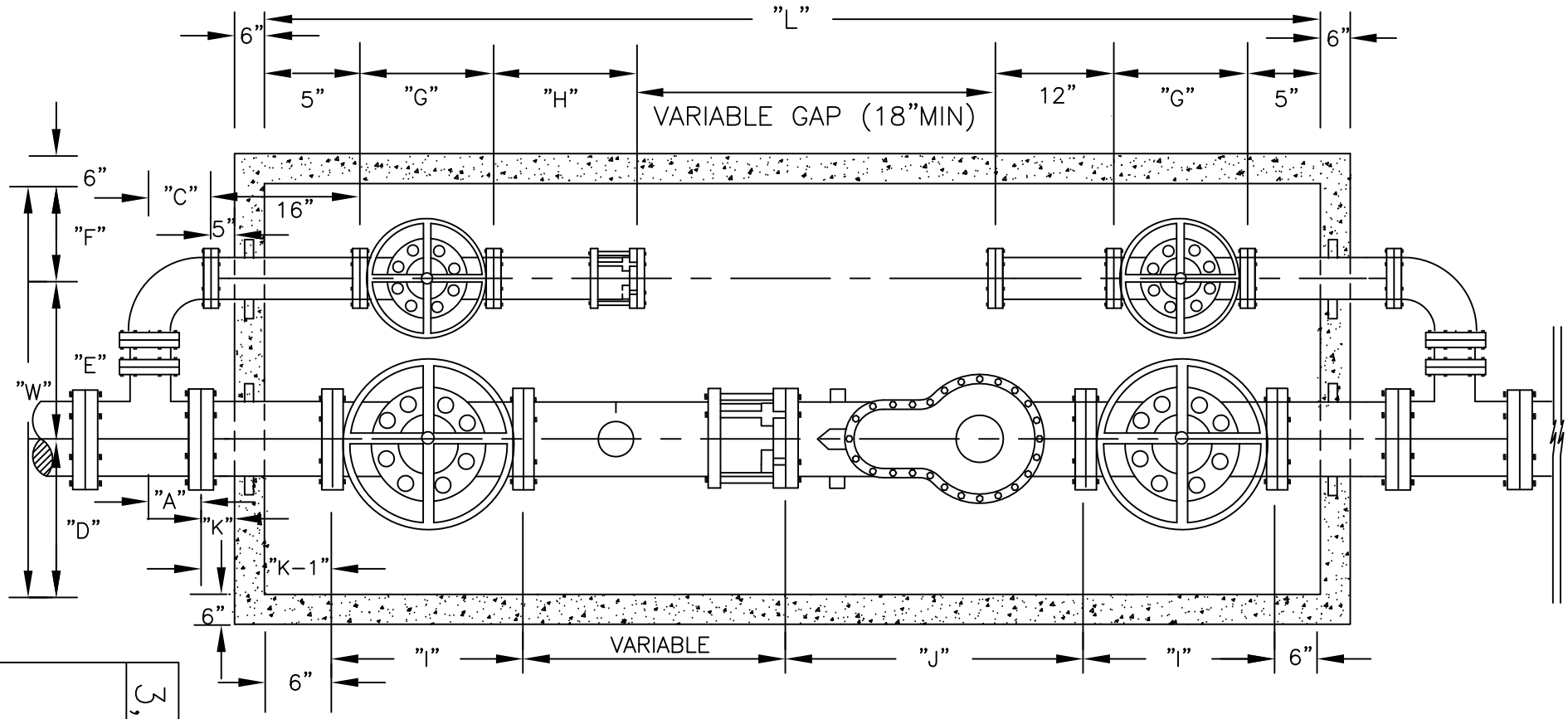

DIMENSION PLAN

-NO SCALE-

3,4,6, & 8" METER

CITY OF EULESS

COE-WM-3

2/99

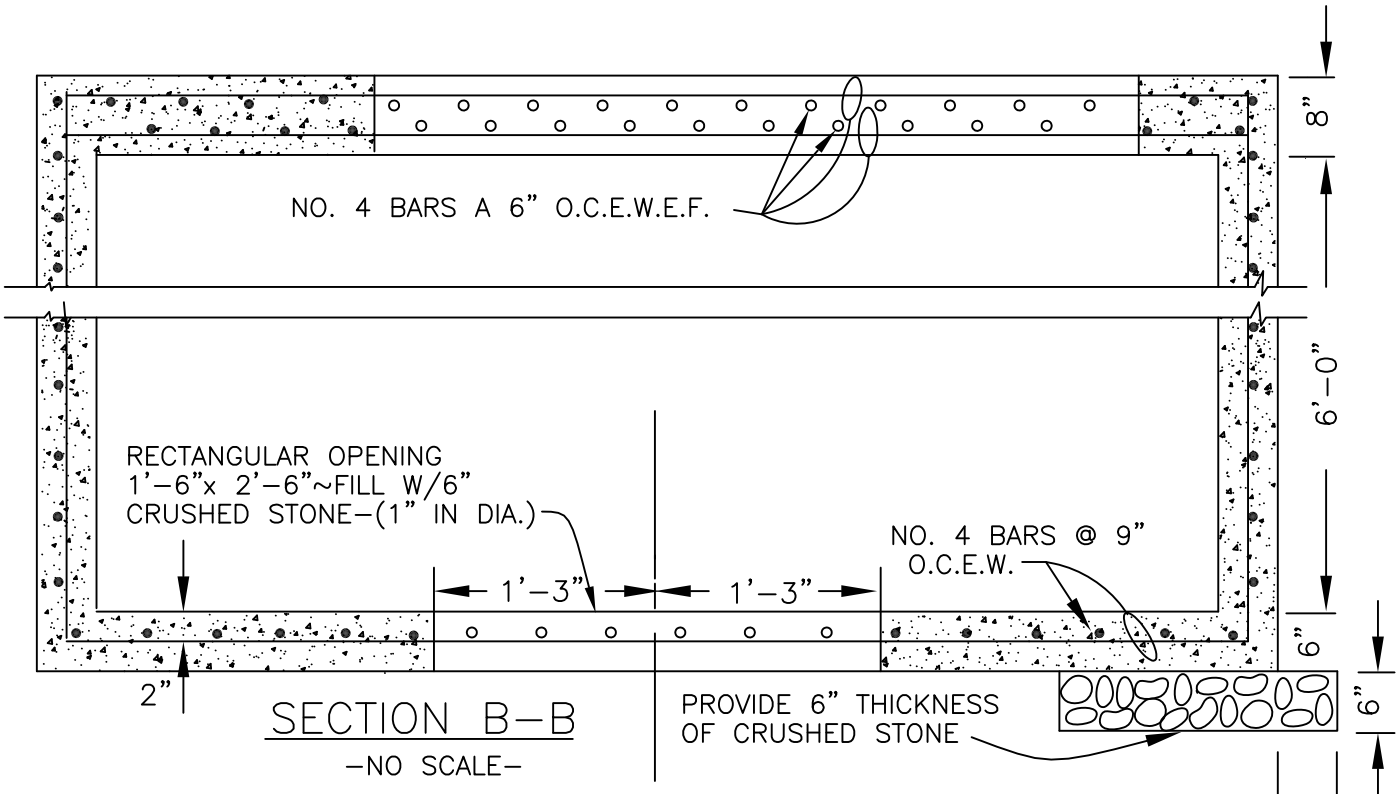

SECTION B-B

-NO SCALE-

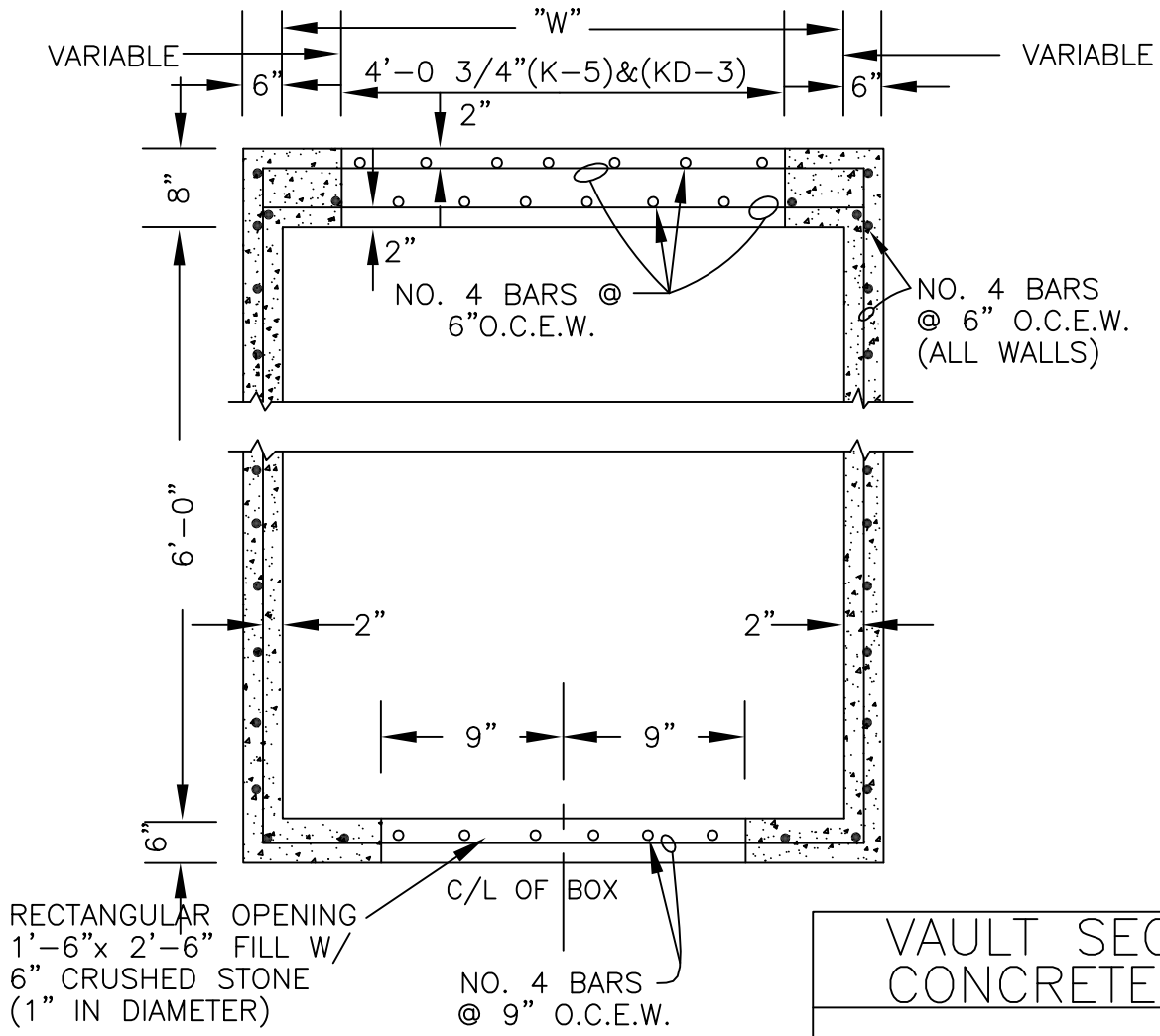

SECTION A-A

-NO SCALE-

VAULT SECTIONS
CONCRETE ONLY

CITY
OF
EULESS

COE-VS-1 2/99

GENERAL NOTES:

1. THE CONCENTRIC REDUCER UPSTREAM OF THE BY-PASS TEE IS TO BE USED ONLY WHEN THE MASTER METER SIZE IS ONE PIPE SIZE LESS THAN THE SUPPLY LINE. THE MINIMUM SUPPLY LINE DIAMETER IS 4-INCHES.
2. THE DIAMETER OF THE SUPPLY LINE AND THE METER SIZE SHALL BE DETERMINED BY THE ANTICIPATED MAXIMUM CONTINUOUS DEMAND AS SET FORTH IN AWWA STANDARD C-702, LATEST REVISION. THE METER SIZE AND TYPE ARE SUBJECT TO THE APPROVAL OF THE CITY ENGINEER.
3. THE LINE SIZE OF THE MASTER METER BY-PASS SHALL BE ONE STANDARD PIPE SIZE LESS THAN THE MASTER METER.
4. ALL WATER LINES AND FITTINGS SHALL BE CAST IRON (CLASS 200) OR DUCTILE IRON (THICKNESS CLASS 52). C.I. OR D.I. PIPE AND FITTINGS OUTSIDE OF THE VAULT SHALL BE WRAPPED WITH 8 MIL POLYETHYLENE CONFORMING TO AWWA STANDARD C-105. MANUFACTURER SHALL BE DOMESTIC OR EQUAL, AS APPROVED BY THE CITY ENGINEER.
5. GATE VALVES SHALL BE CAST IRON BODY, DOUBLE DISC, PARALLEL SEAT, BRASS OR BRONZE MOUNTED THROUGHOUT AND SHALL HAVE A BRASS STEM. VALVES ARE NRS OPENED BY TURNING COUNTER CLOCKWISE. RESILIENT SEAT GATE VALVES CONFORMING TO APPLICABLE SECTIONS OF AWWA STANDARD C-509 ARE ALSO PERMITTED.
6. ALL CONCRETE SHALL BE A MINIMUM CEMENT CONTENT OF 5 SACKS PER CUBIC YARD, AND A 28 DAY COMPRESSIVE STRENGTH OF 3000 PSI. REINFORCING STEEL SHALL BE DEFORMED BARS CONFORMING TO ASTM DESIGNATION A-615, GRADE 40.
7. STANDARD PRE-CAST VAULTS WITH DIMENSIONS EQUAL TO OR GREATER THAN THOSE SHOWN MAY BE SUBSTITUTED FOR THE CAST-IN-PLACE VAULT WITH THE APPROVAL OF THE CITY ENGINEER.
8. ACCESS DOOR FOR THE VAULT CONTAINING 3", 4", OR 6" METER SHALL BE BILCO TYPE K-5 OR APPROVED EQUAL. THE ACCESS DOORS FOR THE 8-INCH METER VAULT SHALL BE BILCO TYPE KD-3 OR APPROVED EQUAL.

SCHEDULE OF DIMENSIONS				
MASTER METER SIZE				
	3"	4"	6"	8"
"A"	0'5 1/2"	0'6 1/2"	0'8"	0'9"
"B"	0'11"	0'6 1/4"	0'6"	N/A
"C"	0'6 1/2"	0'7 3/4"	0'9"	0'11 1/2"
"D"	1'4"	1'5 1/2"	1'4"	1'5"
"E"	1'11"	1'8 1/2"	1'11"	1'8 1/2"
"F"	1'3"	1'4"	1'3"	1'4 1/2"
"G"	0'7"	0'8"	0'9"	0'10 1/2"
"H"	1'3"	1'1"	0'11"	0'8"
"I"	0'8"	0'9"	0'10 1/2"	0'11 1/2"
"J"	2'0"±	2'5"	3'0 1/2"±	4'7 1/4"±
"K"	0'6"	0'6 1/4"	0'6"	0'7 1/2"
"K-1"	1'6"	1'6 1/4"	1'6"	1'7 1/2"
"L"	6'0"	7'0"	8'0"	9'0"
"W"	4'6"	4'6"	4'6"	6'0"

GENERAL NOTES

CITY OF EULESS

COE-VS-2 03/12

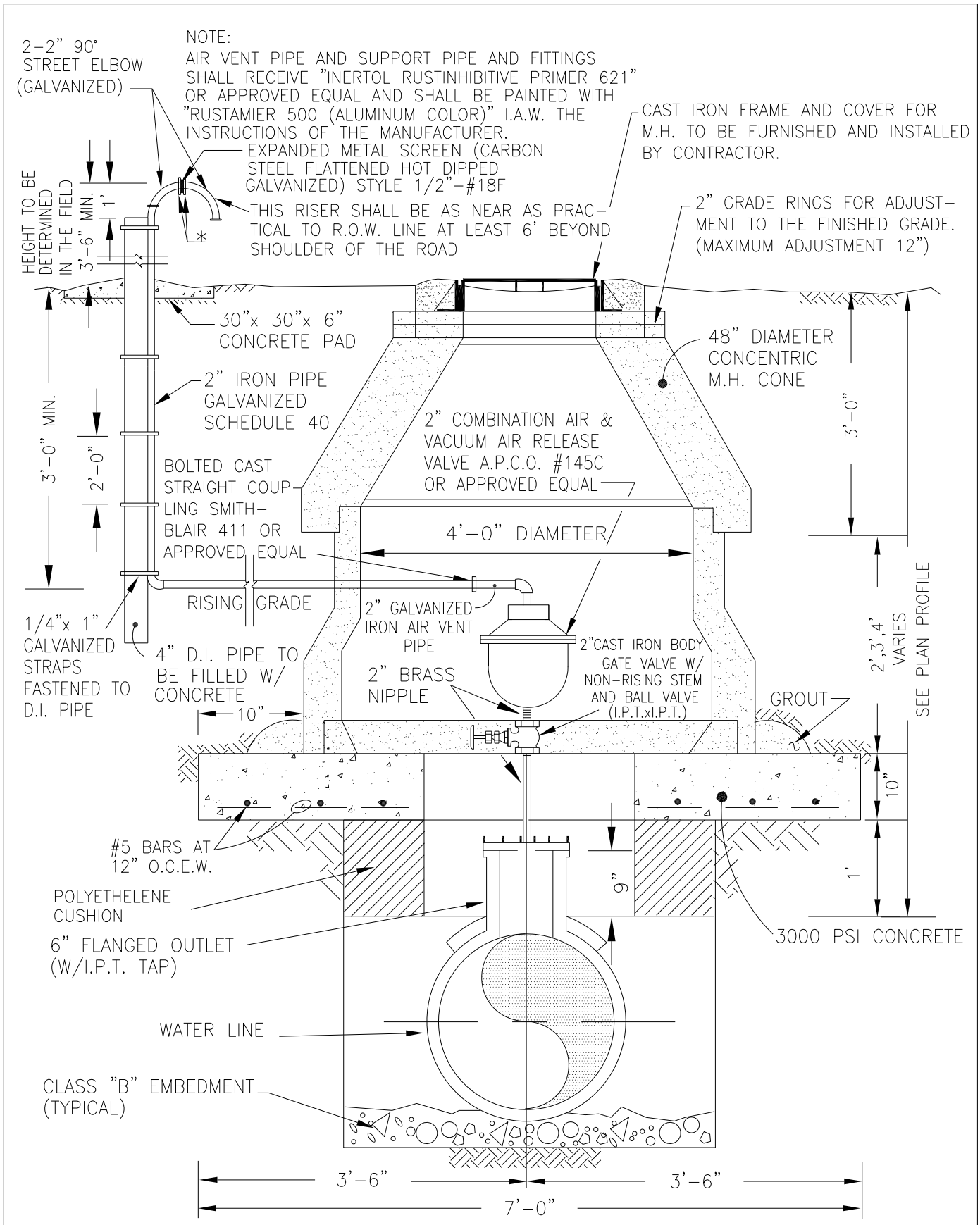

*2"CAST IRON COMPANION FLANGE (125#)
(6" O.D. FLANGE; A.S.A. BOLT CIRCLE;
SQUARE HEAD BOLTS WITH HEX NUTS

VERTICAL COMBINATION AIR RELEASE VALVE DETAIL

-NO SCALE-

VERTICAL COMBINATION AIR RELEASE VALVE

CITY OF EULESS

COE-ARV1

1/15

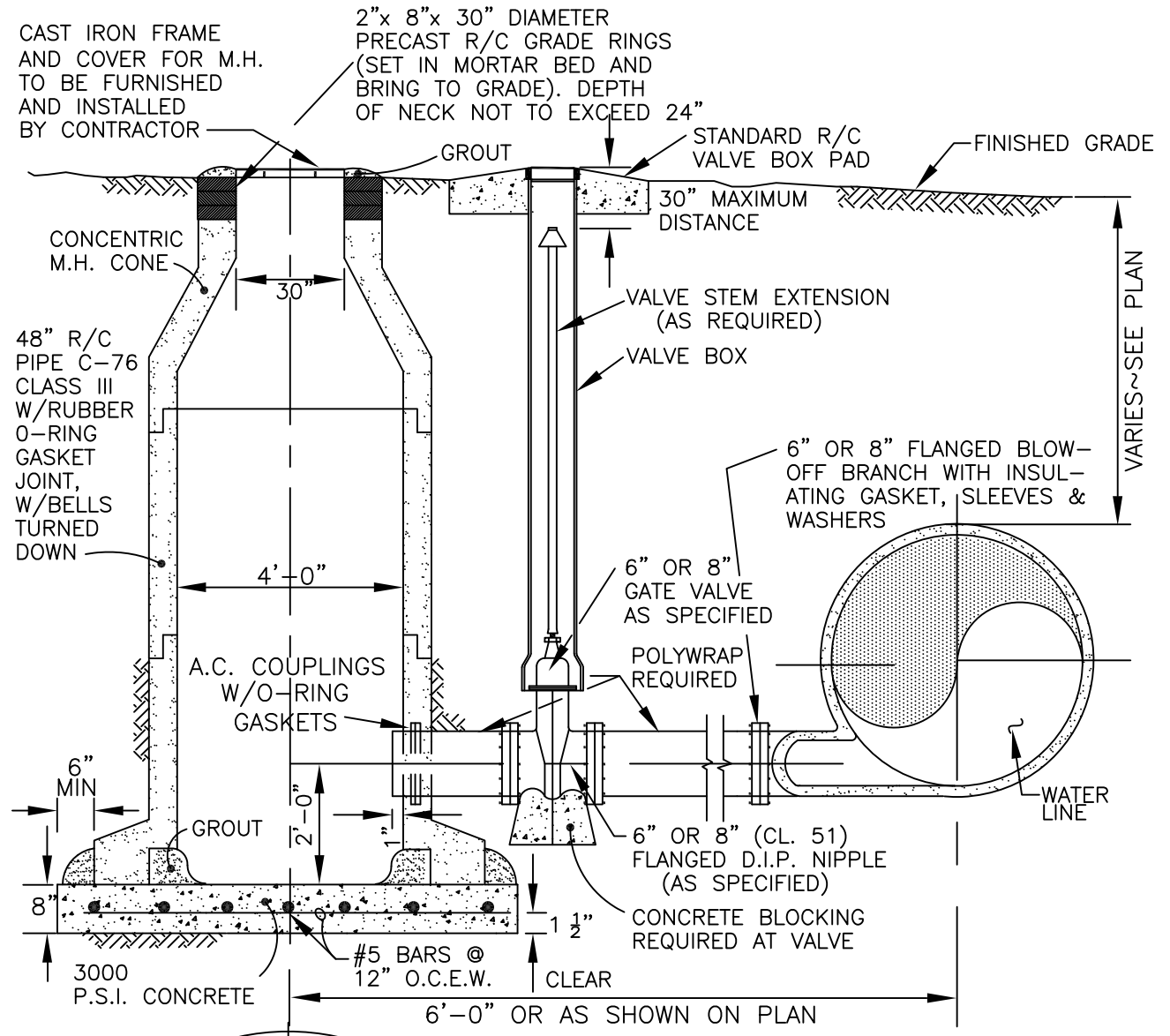

SECTION A-A

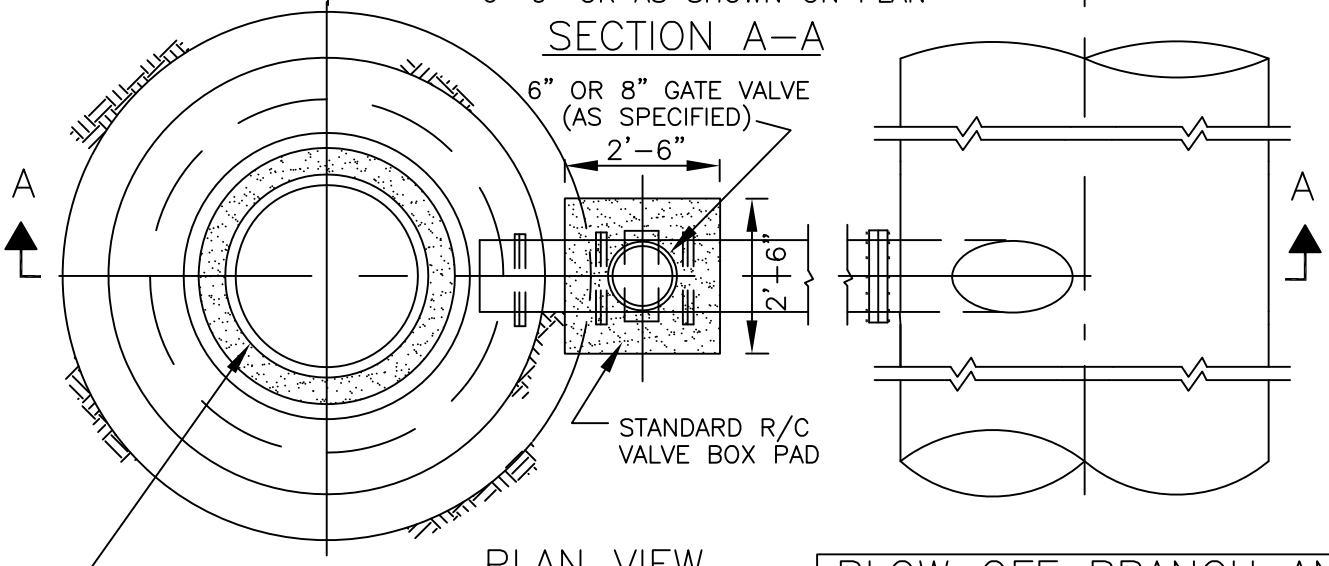

PLAN VIEW
-NO STD SCALE-

BLOW OFF BRANCH AND SUMP DETAILS

CITY OF EULESS

COE-BOS-1 8/10

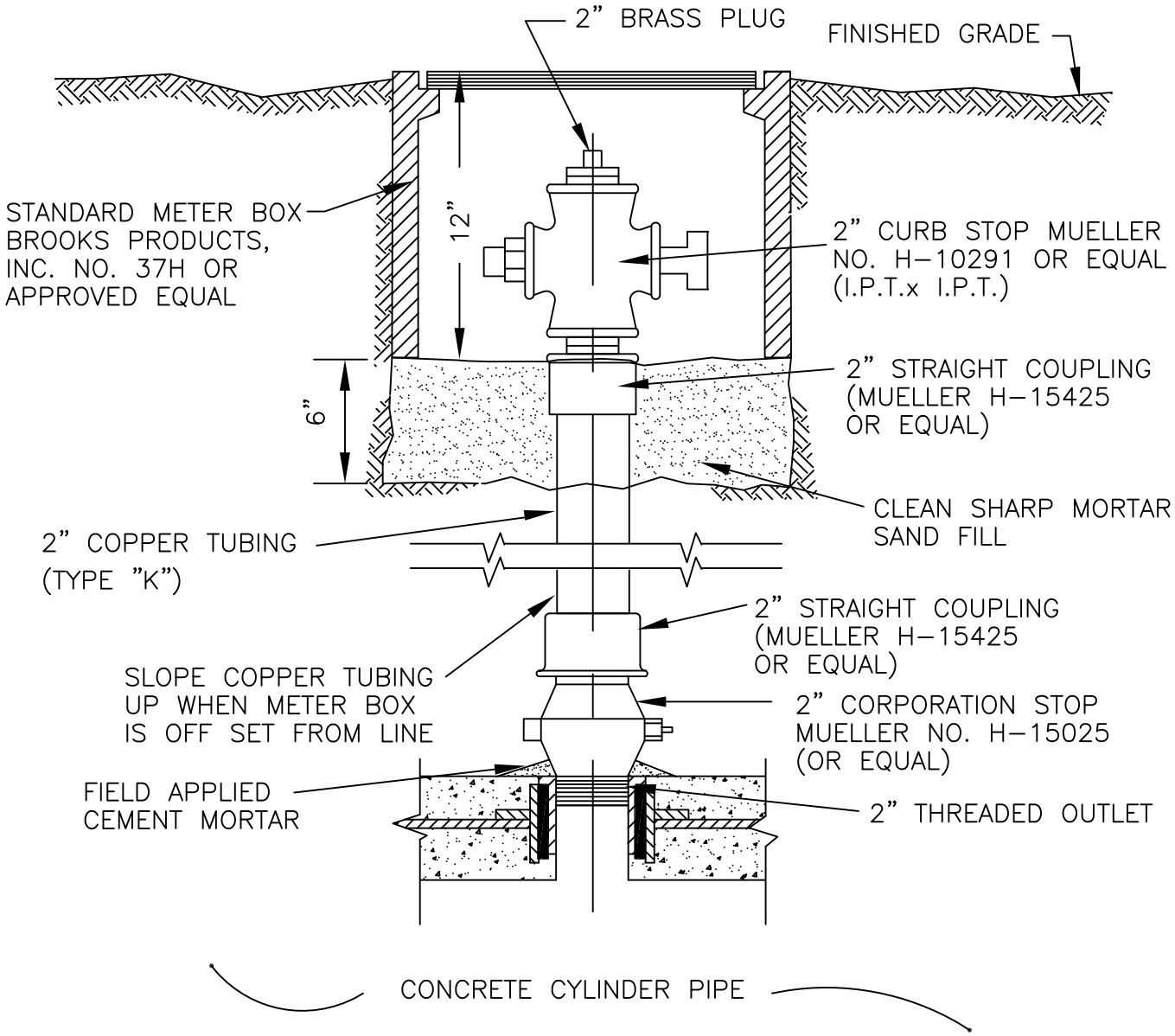

MANUALLY OPERATED AIR VALVE
(2" BLOW OFF VALVE AND VAULT SIMILAR)

-NO SCALE-

MANUALLY OPERATED AIR VALVE	
CITY OF EULESS	
COE-MAV1	2/99

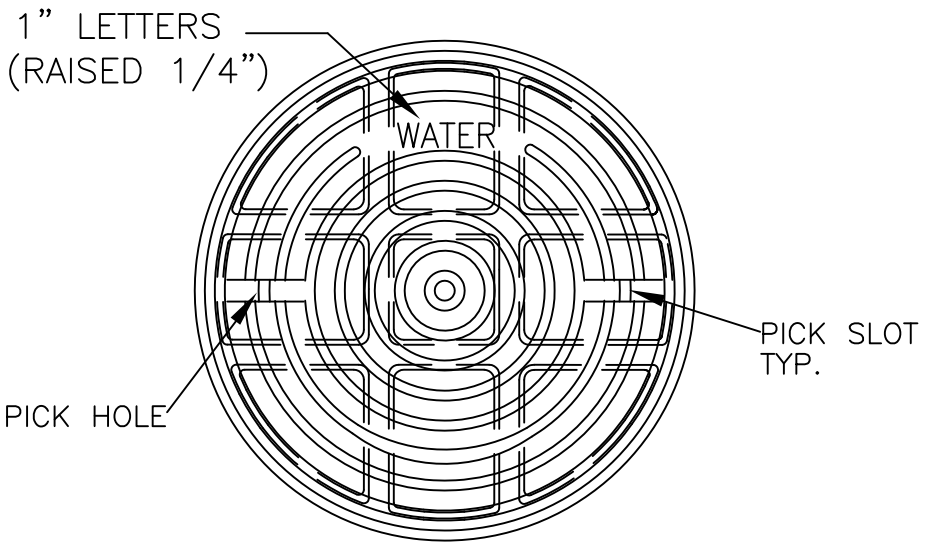

PLAN OF COVER

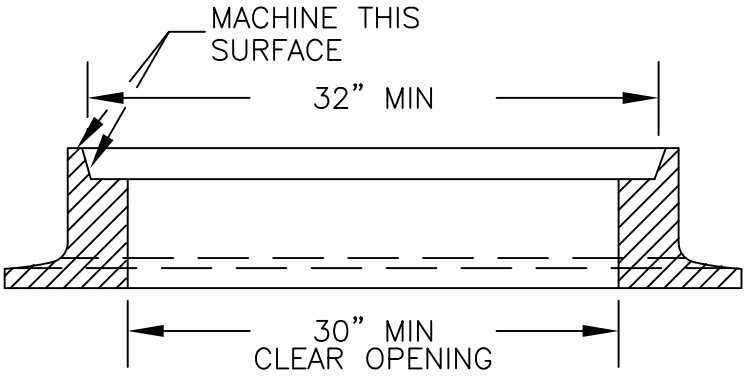

SECTION OF FRAME

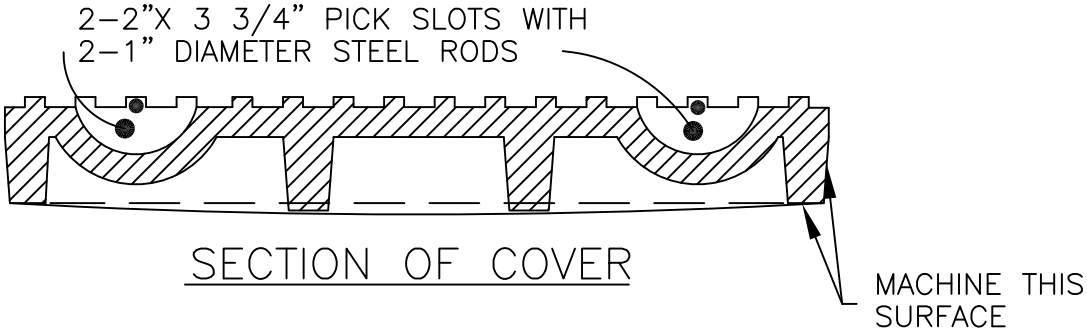

SECTION OF COVER

STANDARD CAST IRON
MANHOLE FRAME AND COVER

-NO STD SCALE-

NOTE:
MANHOLE FRAME AND COVER SHALL HAVE A MINIMUM TOTAL WEIGHT OF 300 LBS.

STANDARD CAST IRON MANHOLE FRAME AND COVER	
CITY OF EULESS	
COE-MHC 1	7/10

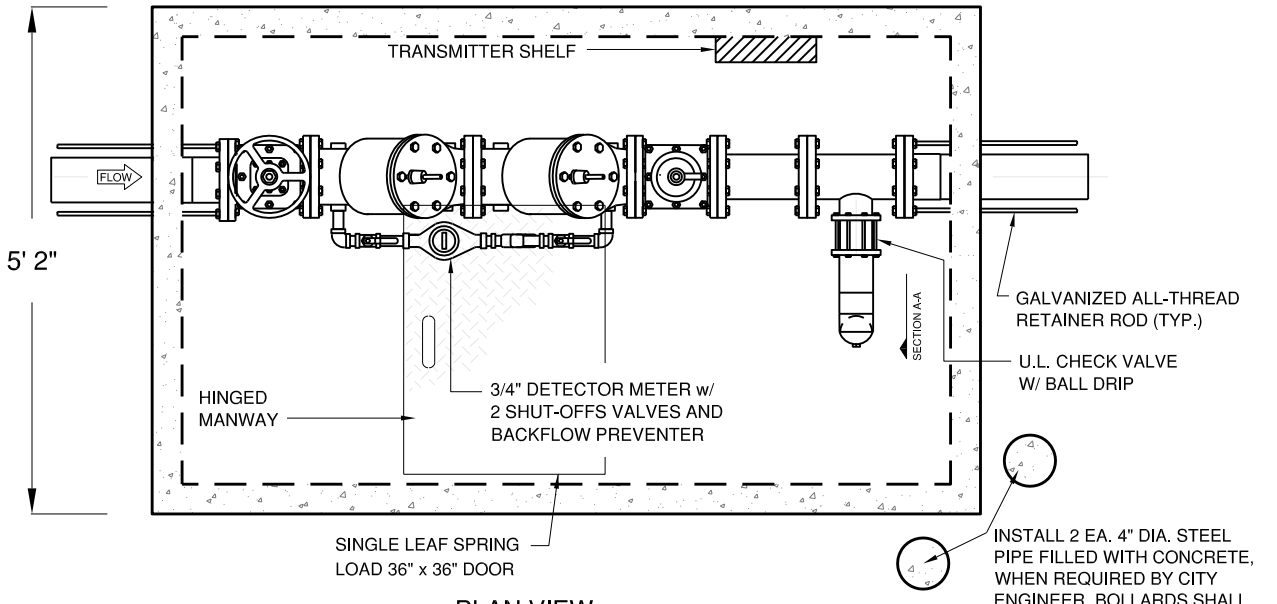

PLAN VIEW

INSTALL 2 EA. 4" DIA. STEEL PIPE FILLED WITH CONCRETE, WHEN REQUIRED BY CITY ENGINEER. BOLLARDS SHALL BE 30" HIGH ABOVE VAULT COVER WITH A MINIMUM OF 3 FEET BELOW GRADE. BOLLARDS SHALL BE PAINTED YELLOW ENAMEL.

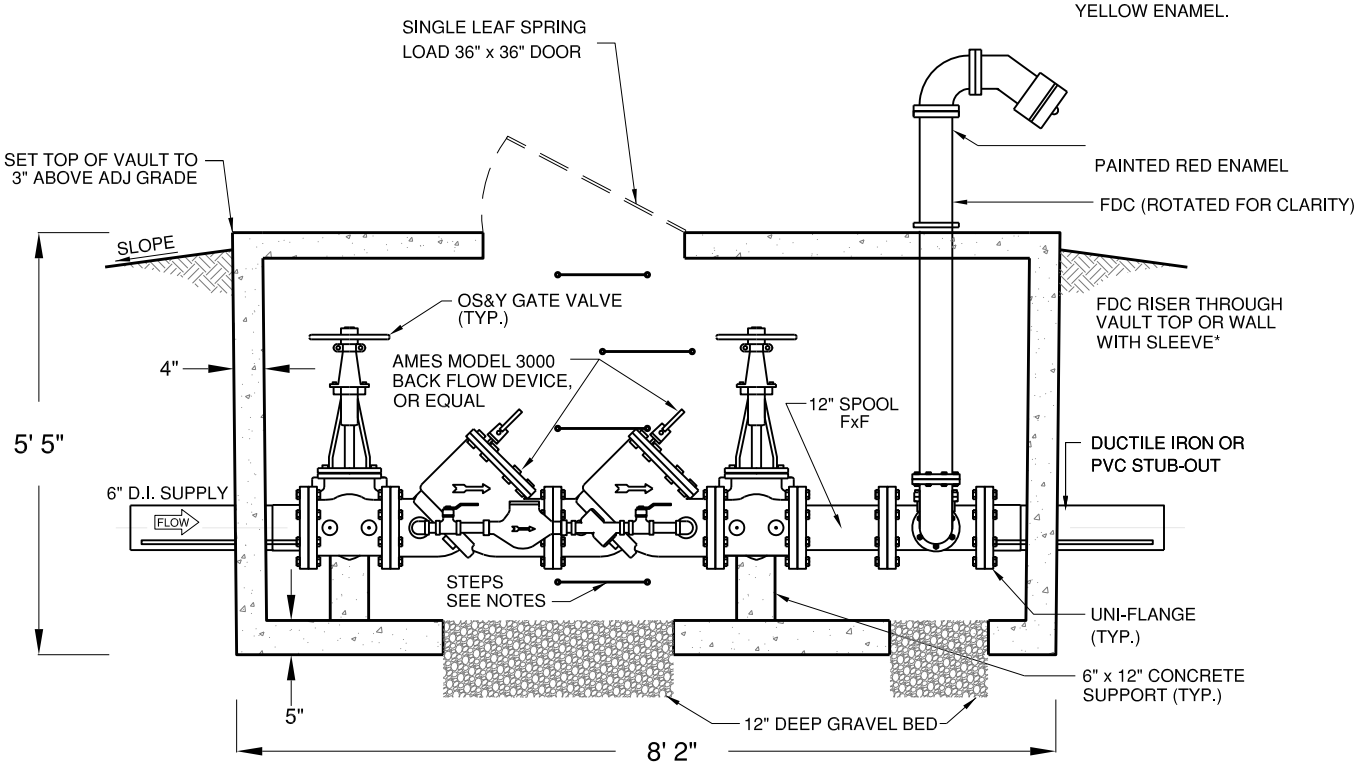

ELEVATION

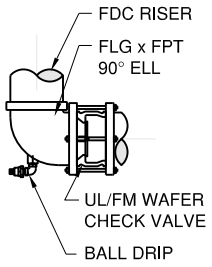

SECTION A-A

NOTES

1. IF FDC RISER IS INSTALLED THROUGH VAULT WALL, FDC SHALL BE INSTALLED IN 3' x 3' CONCRETE PAD WITH #4 REBAR @ 8" O.C.E.W.

2. RECTANGULAR OPENING BENEATH BFP 1'-8" x 3'-0" FILL WITH 12" DEEP ROCK OR STONE (½" TO 1" DIAMETER)

3. RECTANGULAR OPENING BENEATH BALL DRIP 1' x 1'.

FIRE SPRINKLER VAULT

CITY OF EULESS

COE–FS1/2 9/15

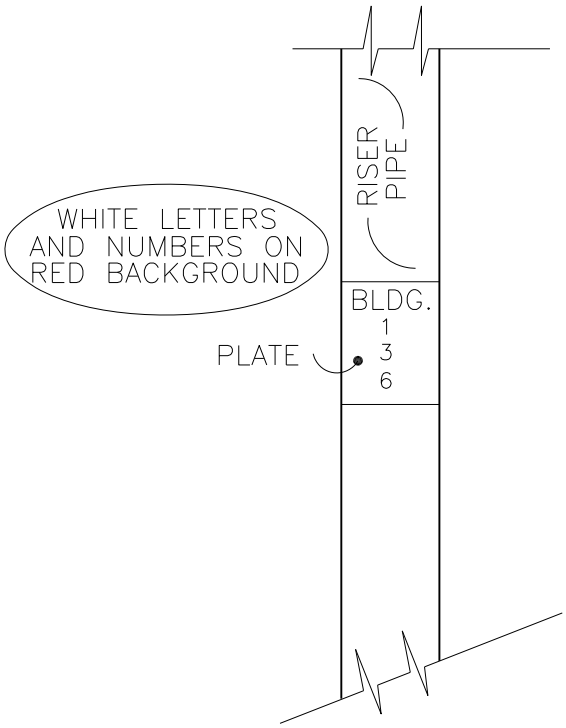

IDENTIFICATION PLATE

–NO SCALE–

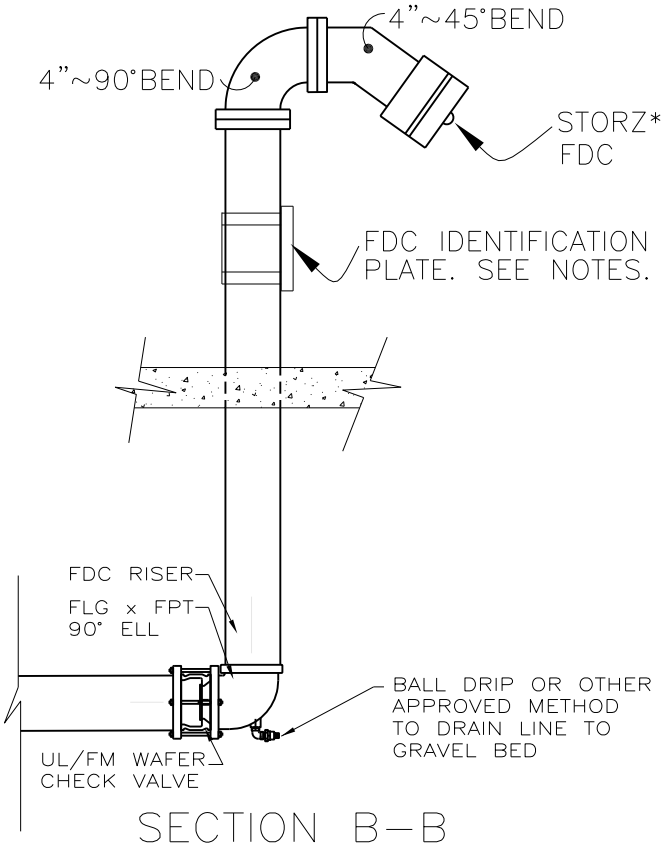

SECTION B–B

–NO SCALE–

IDENTIFICATION PLATE OF BUILDINGS BEING SERVICE BY REMOTE RISER:
PROVIDE A METAL PLATE ON FDC RISER FACING THE FIRE LANE OR ACCESS ROADWAY AND LISTING THE BUILDING NUMBERS BEING SERVED BY THE FIRE SPRINKLER SYSTEM CONNECTION. THE PLATE SHALL BE RED IN COLOR WITH WHITE LETTERING INDICATING THE BUILDING NUMBERS. THE PLATE SHALL BE OF SUFFICIENT SIZE TO ALLOW FOR "BLDG" TO BE STENCILED OR PAINTED ON THE TOP OF THE PLATE IN TWO (2") INCH STROKE LETTERS AND THE BUILDING NUMBERS TO FOLLOW HORIZONTALLY IN THREE (3") INCH NUMBERS. THE LETTERING AND NUMBERS SHALL BE REFLECTIVE WHITE IN COLOR. THE PLATE IS TO BE ATTACHED TO THE RISER PIPE IN A PERMANENT MANNER AND BE VISIBLE FROM THE FIRE LANE OR ACCESS ROADWAY. ANY OTHER METHOD OF MARKING MUST BE APPROVED BY THE FIRE MARSHALL.

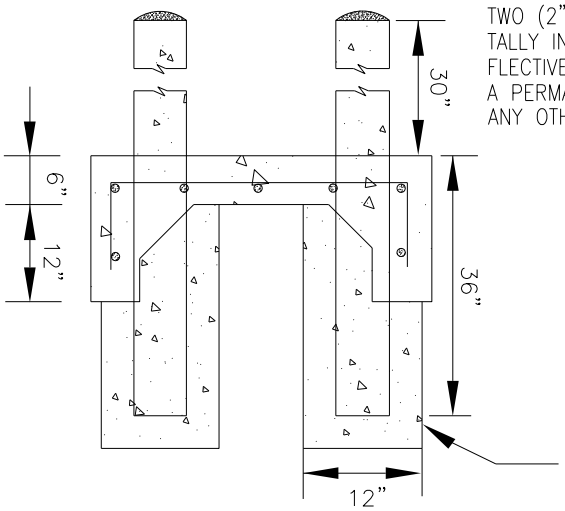

SECTION C–C

–NO SCALE–

*LOCKING KNOX BRAND STORZ CAP REQUIRED.

FIRE SPRINKLER VAULT

CITY OF EULESS

COE–FS3 9/15

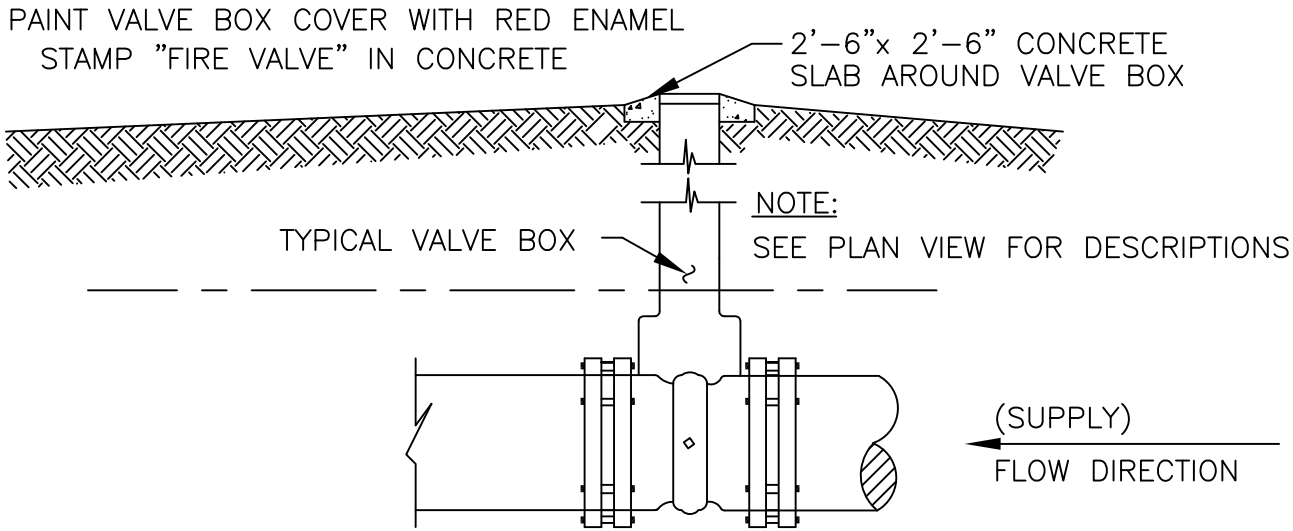

FIRE SPRINKLER SUPPLY LINE
CONCRETE VALVE BOX PAD
-NO SCALE-

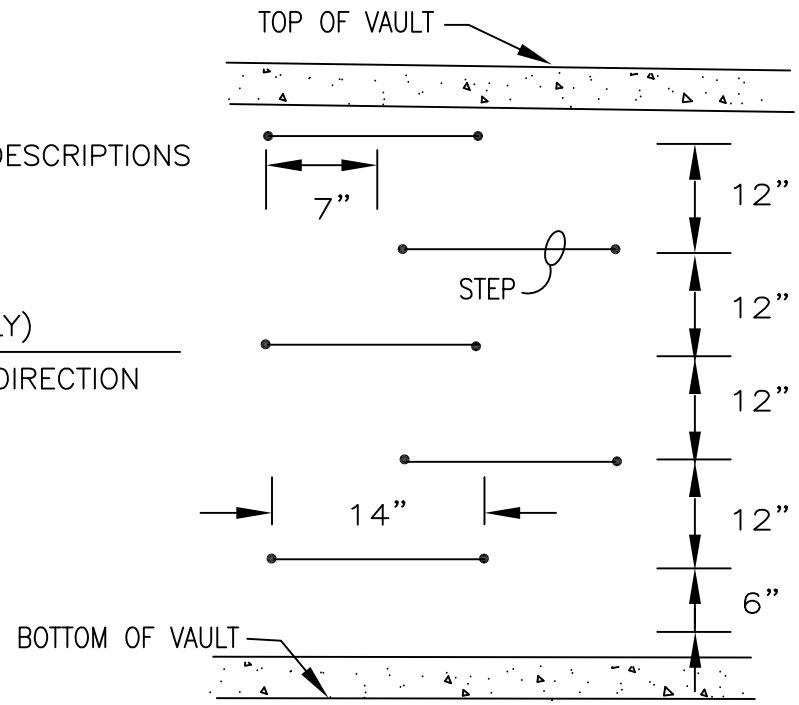

LADDER DETAIL
-NO SCALE-

NOTE ON STEPS:
INSTALL 5 EACH 14" WIDE COPOLYMER POLYPROPYLENE PLASTIC STEPS AS SHOWN. STEPS SHALL BE MANHOLE STEPS PS2-PF AS MANUFACTURED BY M.A. INDUSTRIES, PEACH TREE CITY, GEORGIA OR AN APPROVED EQUAL.

FIRE SPRINKLER VAULT	CITY OF EULESS
	COE-FS4 1/01

FIRE SPRINKLER VAULT GENERAL NOTES:

1. ALL WATER LINES AND FITTINGS SHALL BE CAST IRON (CLASS 200) OR DUCTILE IRON (THICKNESS CLASS 52). C.I. OR D.I. PIPE AND FITTINGS OUTSIDE OF THE VAULT SHALL BE WRAPPED WITH 8 MIL POLYETHYLENE CONFORMING TO AWWA STANDARD C-105. MANUFACTURER SHALL BE DOMESTIC OR EQUAL, AS APPROVED BY CITY ENGINEER.
2. GATE VALVES SHALL BE CAST IRON BODY, DOUBLE DISC, PARALLEL SEAT, BRASS OR BRONZE MOUNTED THROUGHOUT AND SHALL HAVE A BRASS STEM. VALVES ARE NRS OPENED BY TURNING COUNTER CLOCKWISE. RESILIENT SEAT GATE VALVES CONFORMING TO APPLICABLE SECTIONS OF AWWA STANDARD C-509 ARE ALSO PERMITTED.
3. ALL CONCRETE SHALL BE 3000 PSI WITH A MINIMUM CEMENT CONTENT OF 5 SACKS PER CUBIC YARD, AND A 28 DAY COMPRESSIVE STRENGTH OF 3000 PSI. FLEXURAL STRENGTH OF THE CONCRETE AT 7 DAYS SHALL NOT BE LESS THEN 500 PSI. REINFORCING STEEL SHALL BE DEFORMED BARS CONFORMING TO ASTM DESIGNATION A-615, GRADE 40.
4. STANDARD PRE-CAST VAULTS WITH DIMENSIONS EQUAL TO OR GREATER THAN THOSE SHOWN MAY BE SUBSTITUTED FOR THE CAST-IN-PLACE VAULT WITH THE APPROVAL OF THE FIRE MARSHAL.
5. ACCESS DOOR FOR THE VAULT CONTAINING 6" DETECTOR CHECK SHALL BE BILCO TYPE K-5 OR APPROVED EQUAL.
6. THE 4" STORZ CONNECTION SHALL BE "GUARDIAN" MODEL NO. 151-STZ OR APPROVED EQUAL.
7. THE 4" WATER SWING CHECK ON THE FDC LINE SHALL BE A CLA-VAL 501 WAFER SWING CHECK OR APPROVED EQUAL.

FIRE SPRINKLER VAULT		
COE-FS5	CITY OF EULESS	7/13

II

SANITARY SEWER DETAILS

NOTES:

1. ALL TRENCH BACKFILL WILL BE COMPACTED (MAX. 12" LIFTS) TO 95% DRY DENSITY, ASTM D-698. BACKFILL MUST BE APPROVED BY ENGINEERING DEPARTMENT, CITY OF EULESS.
2. NATIVE MATERIAL FROM TRENCH EXCAVATION MUST NOT CONTAIN ROCKS OVER 3" DIA. BACKFILL SHALL NOT CONTAIN EXCESSIVE SILT OR VEGETATION.
3. GRANULAR BEDDING MATERIAL SHALL CONSIST OF WASHED OR SCREENED GRAVEL, CRUSHED STONE OR RIVER ROCK OF 1/4" TO 1/2" GRADED.

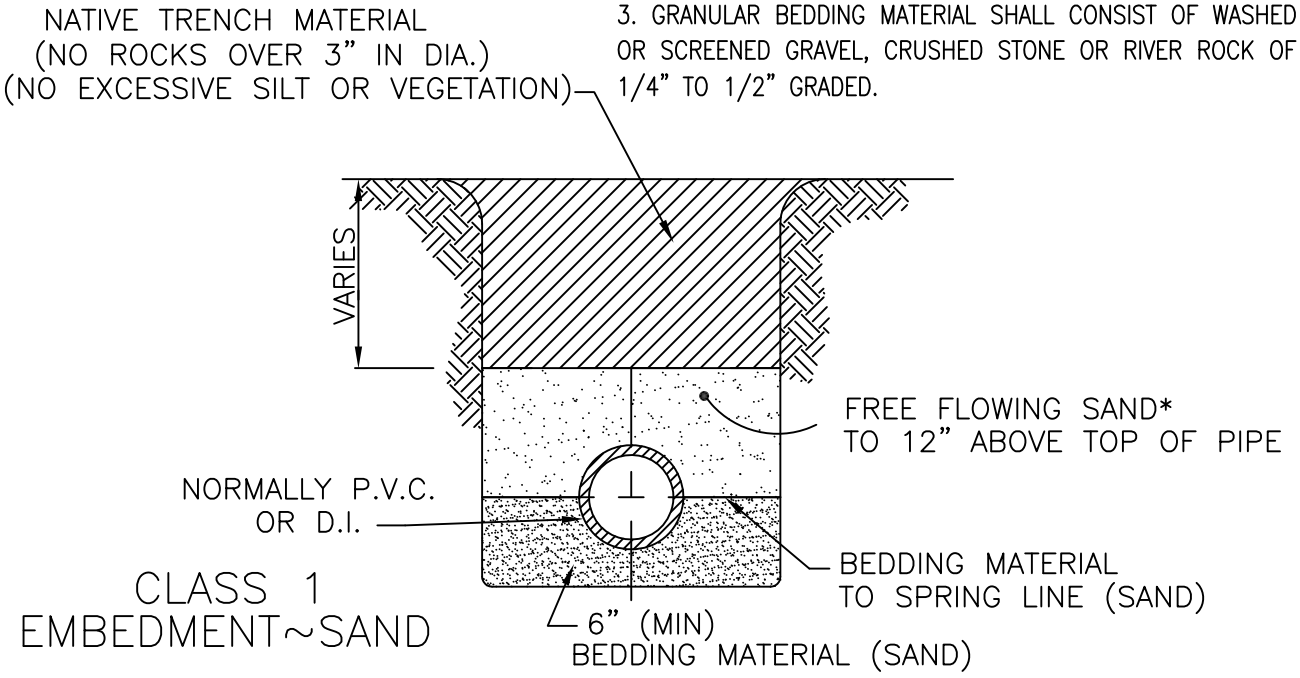

CLASS 1
EMBEDMENT~SAND

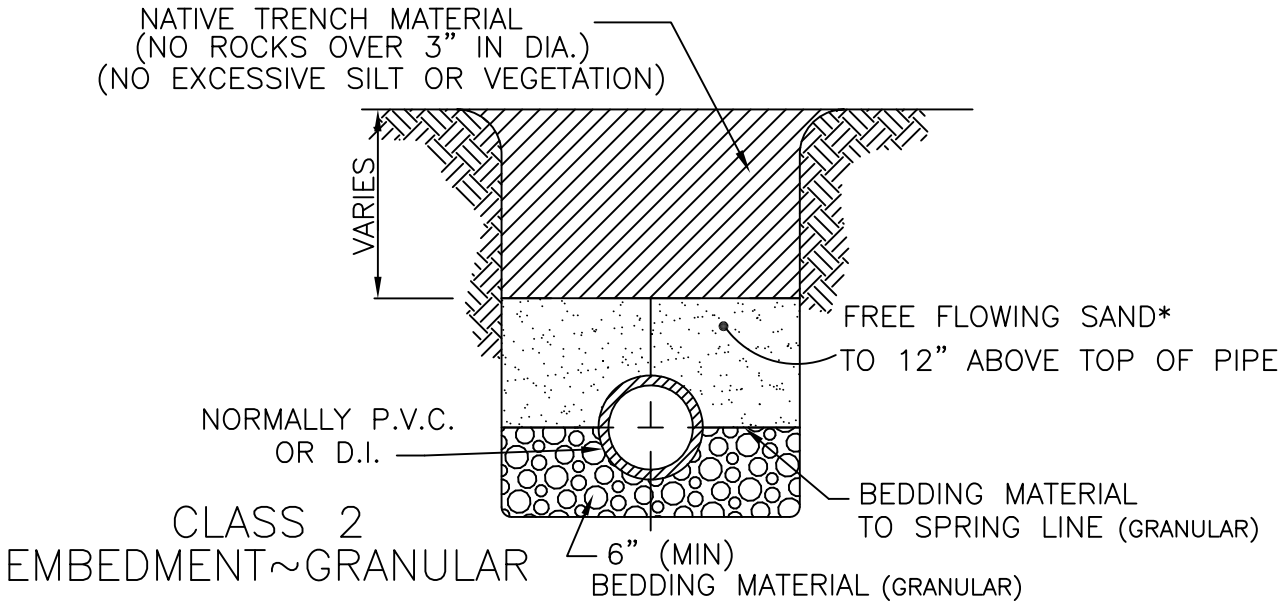

CLASS 2
EMBEDMENT~GRANULAR

*SAND FOR EMBEDMENT SHALL BE A FREE FLOWING MATERIAL WHICH CONTAINS NO CLAY, IS REASONABLY FREE FROM ORGANIC MATERIAL AND DOES NOT FORM A MUCK OR MUD WHEN WET. THE GRADATION SHALL BE SUCH THAT A MINIMUM OF 95% IS RETAINED ON A #100 SIEVE. THE P.I. OF THE SOIL FRACTION PASSING THE NO. 40 SIEVE SHALL NOT BE GREATER THAN FIVE (5).

SANITARY SEWER
EMBEDMENT DETAILS

CITY
OF
EULESS

COE-SSE1 2/99

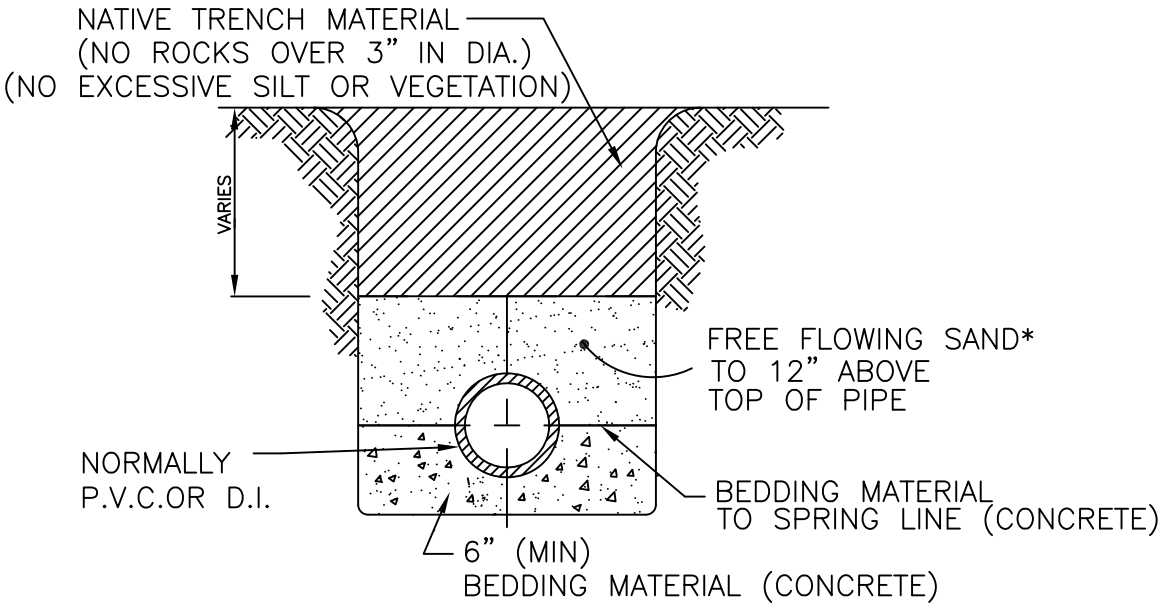

CLASS 3
EMBEDMENT~CONCRETE

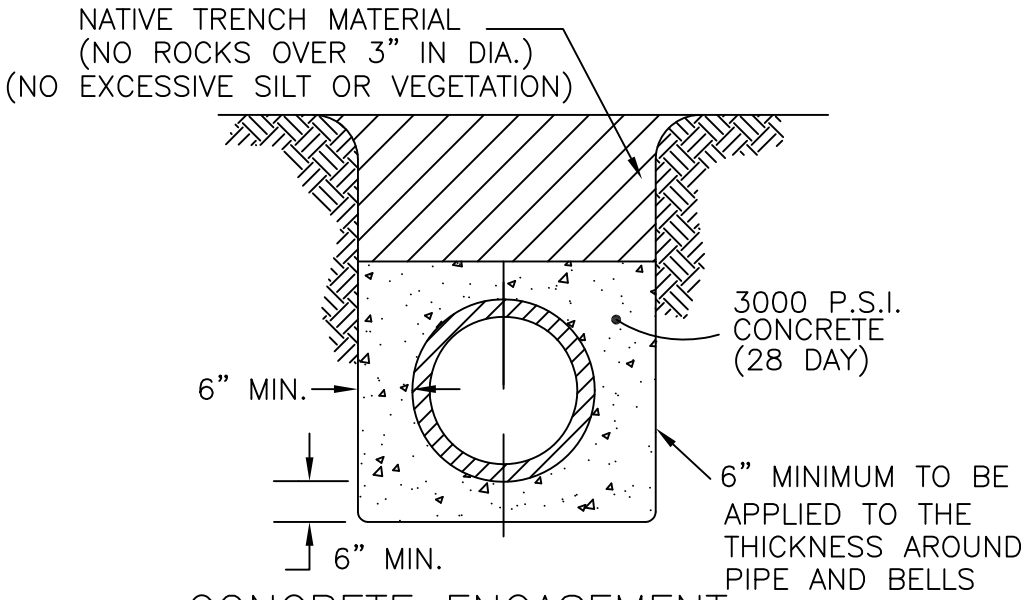

CONCRETE ENCASEMENT

*SAND FOR EMBEDMENT SHALL BE A FREE FLOWING MATERIAL WHICH CONTAINS NO CLAY, IS REASONABLY FREE FROM ORGANIC MATERIAL AND DOES NOT FORM A MUCK OR MUD WHEN WET. THE GRADATION SHALL BE SUCH THAT A MINIMUM OF 95% IS RETAINED ON A #100 SIEVE. THE P.I. OF THE SOIL FRACTION PASSING THE NO. 40 SIEVE SHALL NOT BE GREATER THAN FIVE (5).

1. ALL TRENCH BACKFILL WILL BE COMPACTED (MAX. 12" LIFTS) TO 95% DRY DENSITY, ASTM D-698. BACKFILL MUST BE APPROVED BY ENGINEERING DEPARTMENT, CITY OF EULESS.
2. NATIVE MATERIAL FROM TRENCH EXCAVATION MUST NOT CONTAIN ROCKS OVER 3" DIA. BACKFILL SHALL NOT CONTAIN EXCESSIVE SILT OR VEGETATION.

SANITARY SEWER
EMBEDMENT DETAILS

CITY
OF
EULESS

COE-SSE 2 8/10

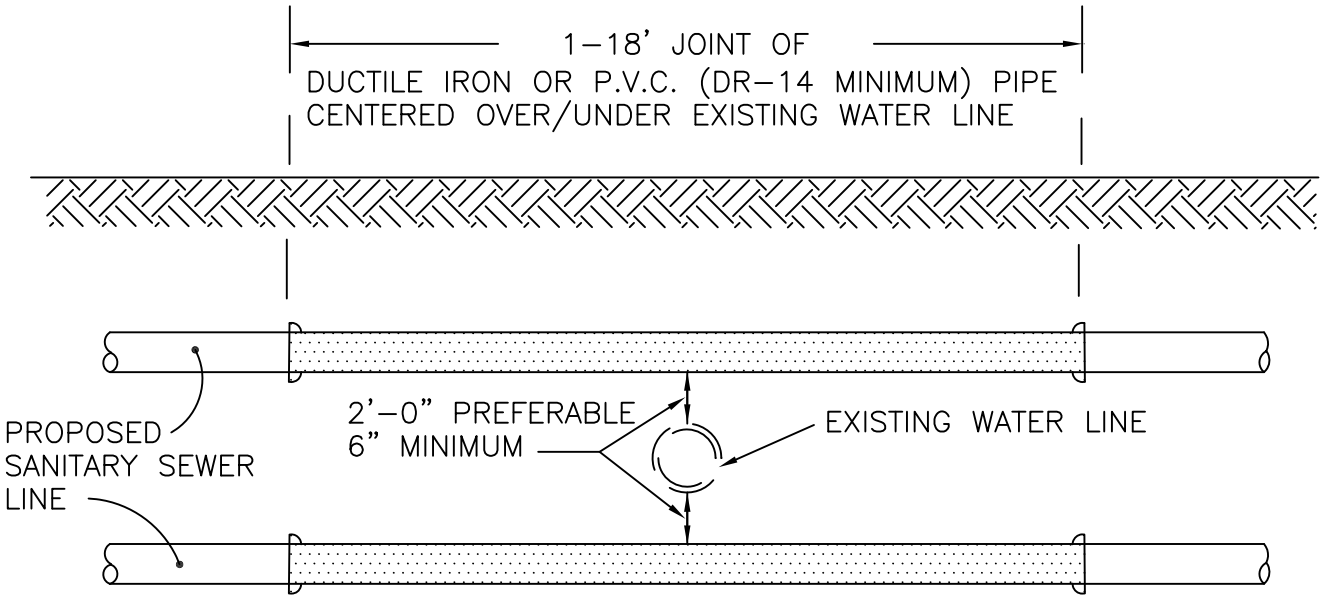

SEPARATION REQUIREMENTS

–NO SCALE–

SEPARATION REQUIREMENTS	
CITY OF EULESS	
COE–US–2	2/99

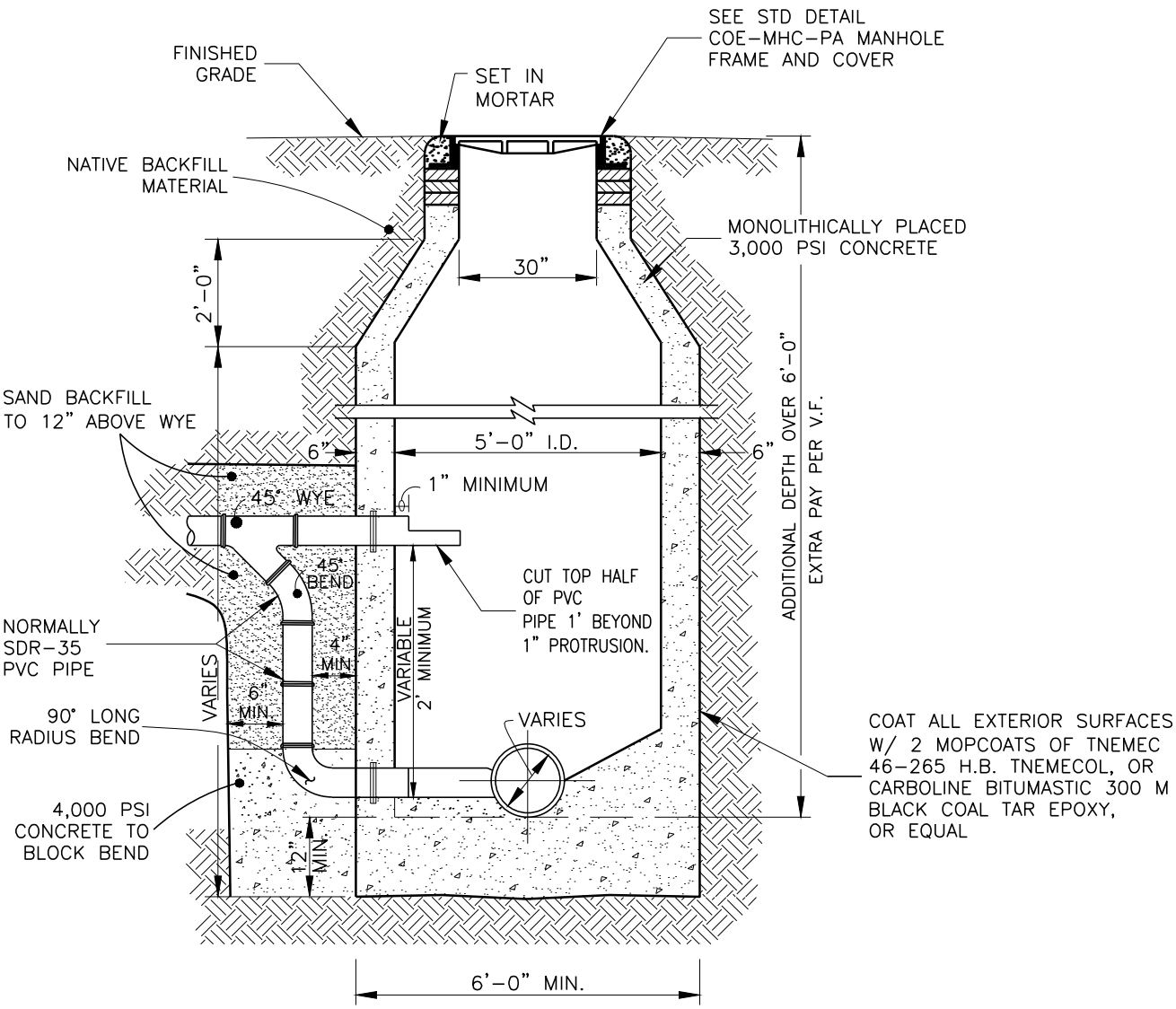

STANDARD CAST-IN-PLACE CONCRETE DROP MANHOLE

-NO STD SCALE-

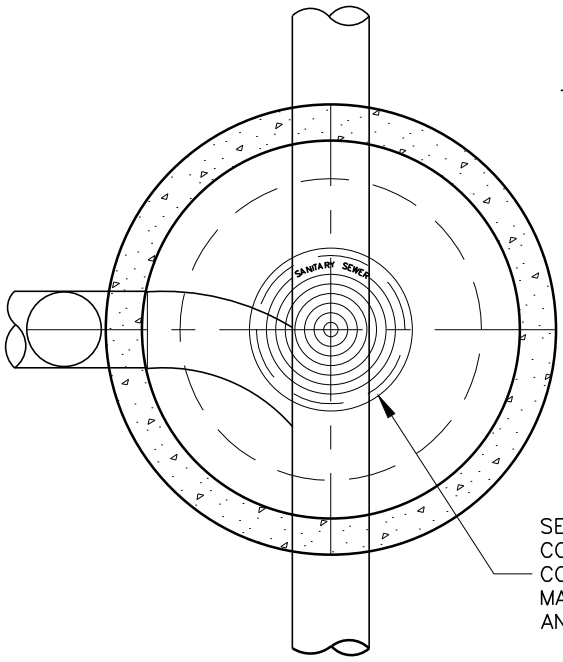

NOTES

1. SEE NOTES FOR "CAST-IN-PLACE" MANHOLE DETAIL COE-SSMH. PRE-CAST DROP MANHOLE MAY BE USED. SEE PRE-CAST MANHOLE DETAIL COE-PCMH.
2. MANHOLE BACKFILL SHALL CONSIST OF 2 SACK FLOWABLE FILL WHEN LOCATED IN PAVED AREAS.

CAST-IN-PLACE DROP MANHOLE

CITY OF EULESS

COE-CIP1 2/17

NOTES:

1. PRECAST MANHOLE TO MEET ALL REQUIREMENTS OF ASTM C-478.
2. O'RING GASKET JOINT REQUIRED IN ACCORDANCE WITH ASTM C-443. PREFORMED PLASTIC GASKET, I.E. RAM-NEK MAY ALSO BE USED.
3. EACH INDIVIDUAL SECTION OF THE PRECAST MANHOLE MUST BE STAMPED WITH THE ASTM SPECIFICATION NUMBER, THE MANUFACTURER'S NAME, AND DATE MANUFACTURED.
4. MANHOLE BACKFILL SHALL CONSIST OF 2 SACK FLOWABLE FILL WHEN LOCATED IN PAVED AREAS.
4. SERVICES WHICH ARE CONNECTED TO MANHOLES SHALL BE INSTALLED A MINIMUM OF 6 INCHES ABOVE THE MAIN FLOWLINE.

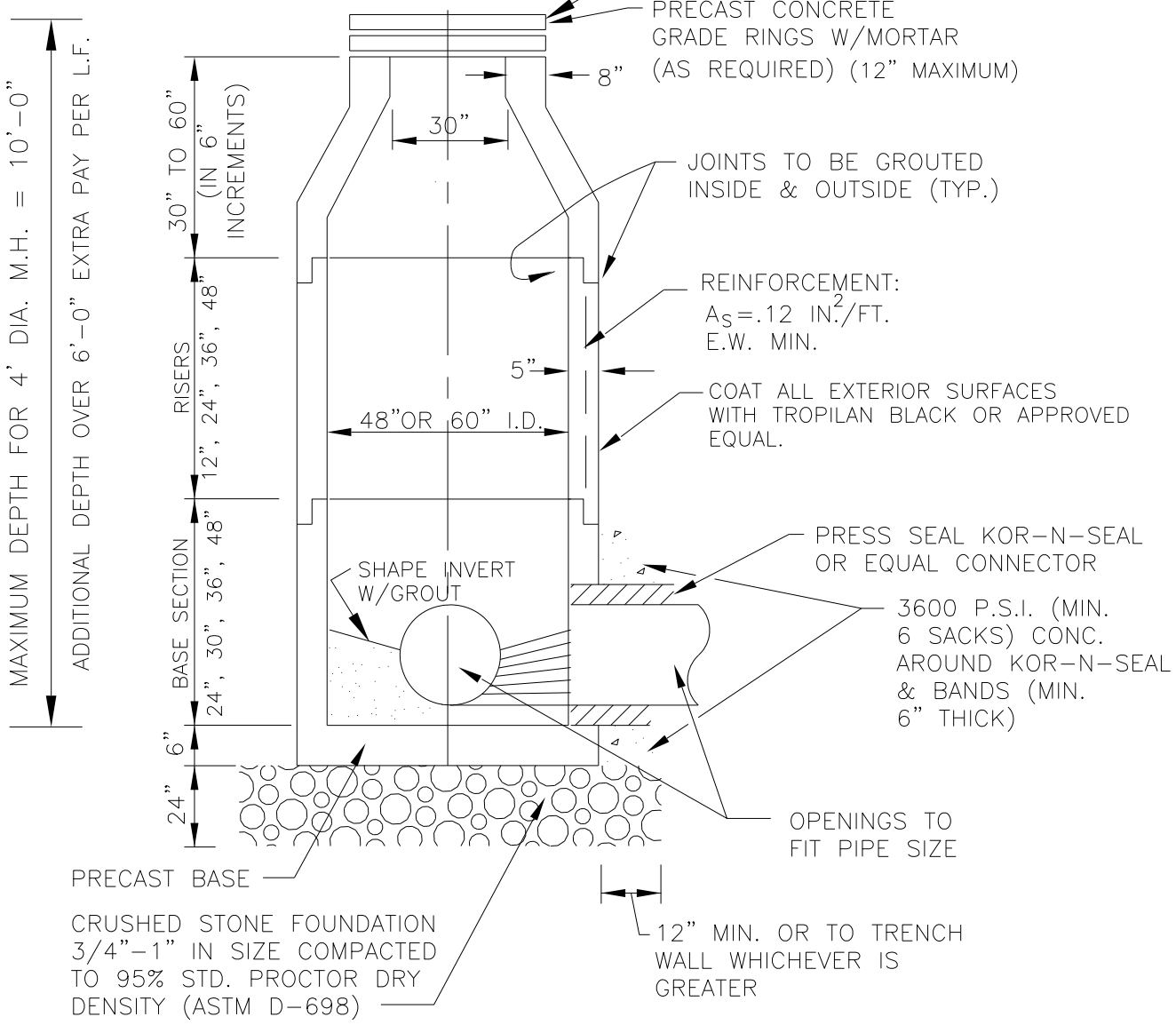

TYPICAL 48" DIA. MANHOLE
(WITH PRECAST BASE & FACTORY INVERT)

-NO STD SCALE-

48" PRECAST MANHOLE	
CITY OF EULESS	
COE-PCMH	8/13

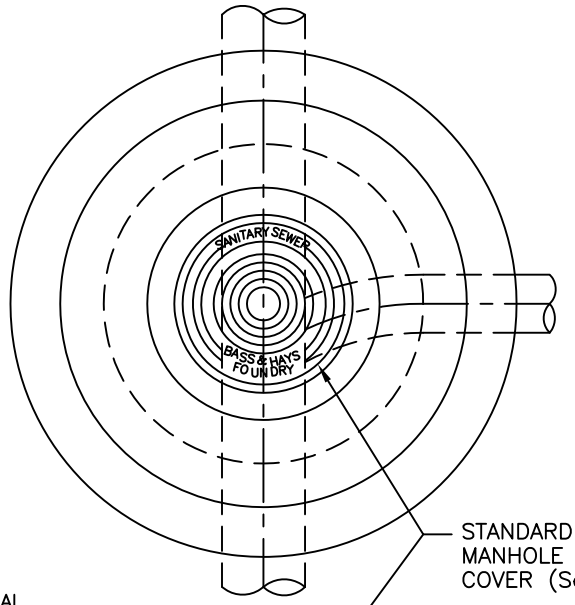

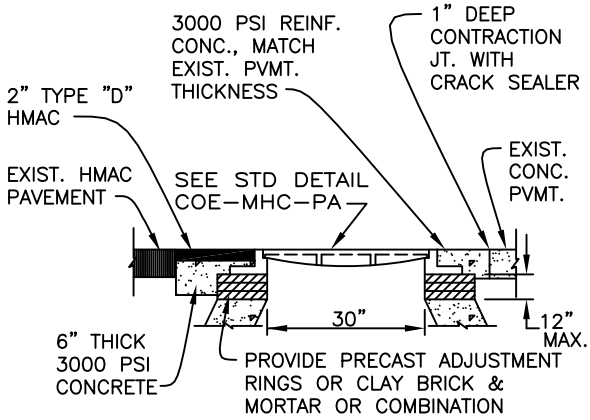

MANHOLE TOP FOR STREET INSTALLATION

-NO SCALE-

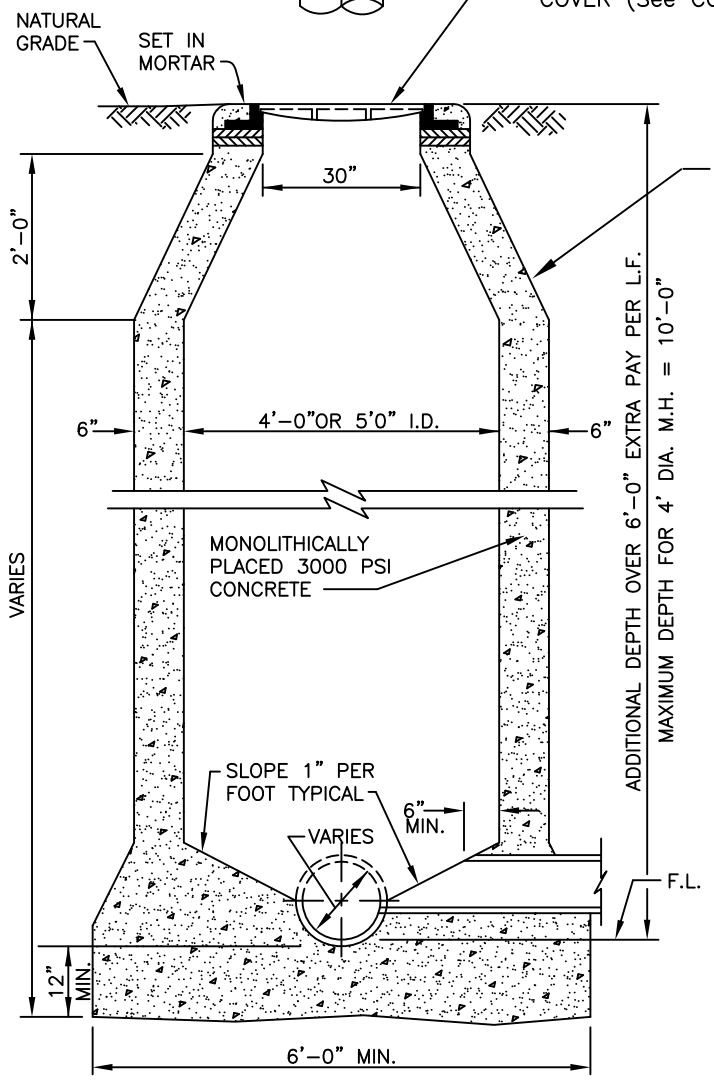

SANITARY SEWER MANHOLE

-NO SCALE-

NOTES:

1. STANDARD CAST-IN-PLACE CONCRETE MANHOLE TO BE USED WITH SEWERS 6" THROUGH 36" IN DIAMETER WHERE SPECIFIED.
2. THE CONNECTION OF THE SEWER PIPE TO THE MANHOLE SHALL BE ACCOMPLISHED BY USING MANHOLE COUPLING OR RUBBER RING WATER STOPS AS RECOMMENDED BY THE PIPE MANUFACTURER.
3. CONCRETE SHALL HAVE 5 SACKS CEMENT/C.Y., MAXIMUM SLUMP OF 5", AND A 3000 PSI COMPRESSIVE STRENGTH AT 28 DAYS.
4. SERVICES WHICH ARE CONNECTED TO MANHOLES SHALL BE INSTALLED A MINIMUM OF 6 INCHES ABOVE THE MAIN FLOWLINE.
5. MANHOLE BACKFILL SHALL CONSIST OF 2 SACK FLOWABLE FILL WHEN LOCATED IN PAVED AREAS.

CAST-IN-PLACE MANHOLE

CITY OF EULESS

COE-SSMH 8/13

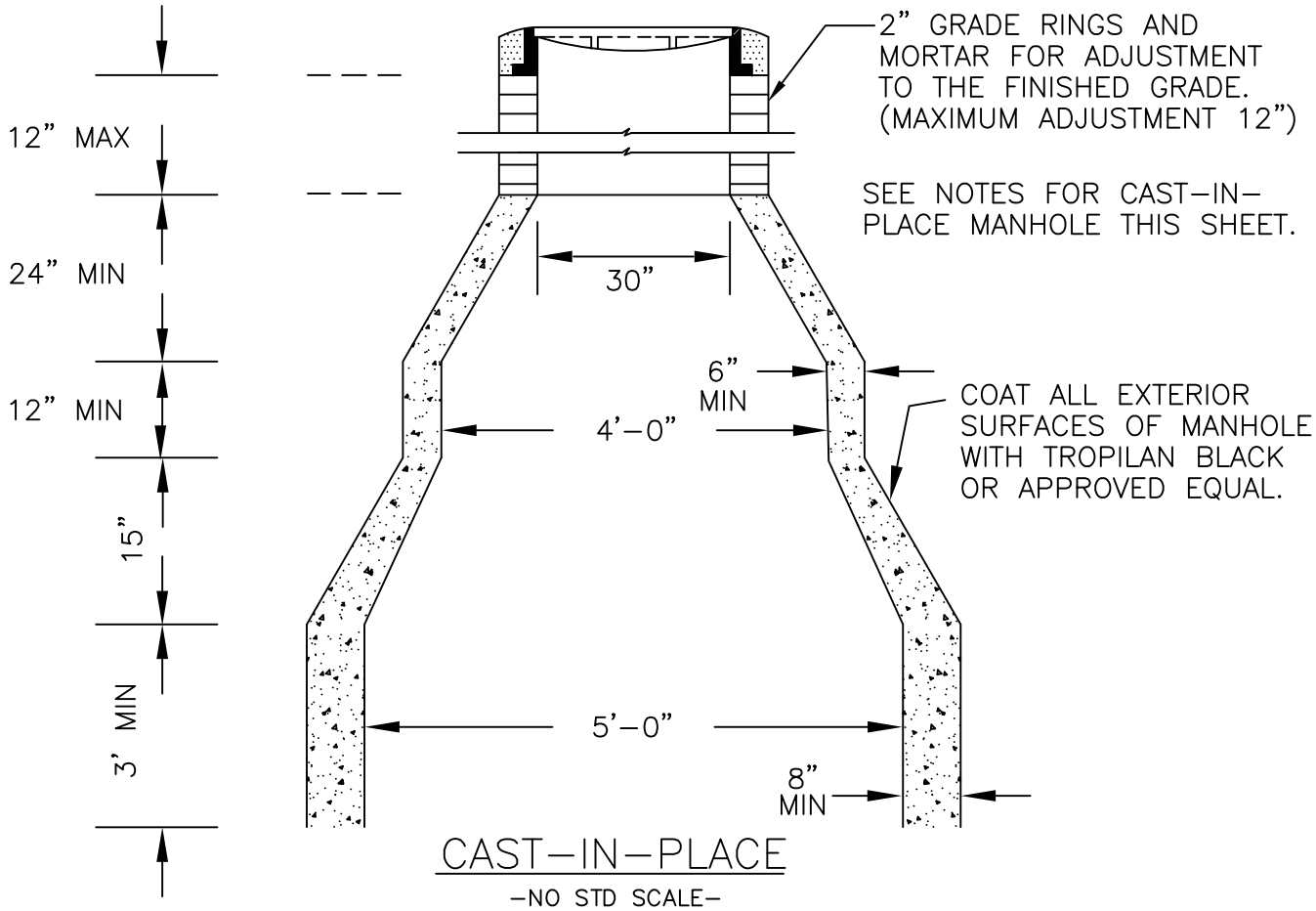

CAST-IN-PLACE

-NO STD SCALE-

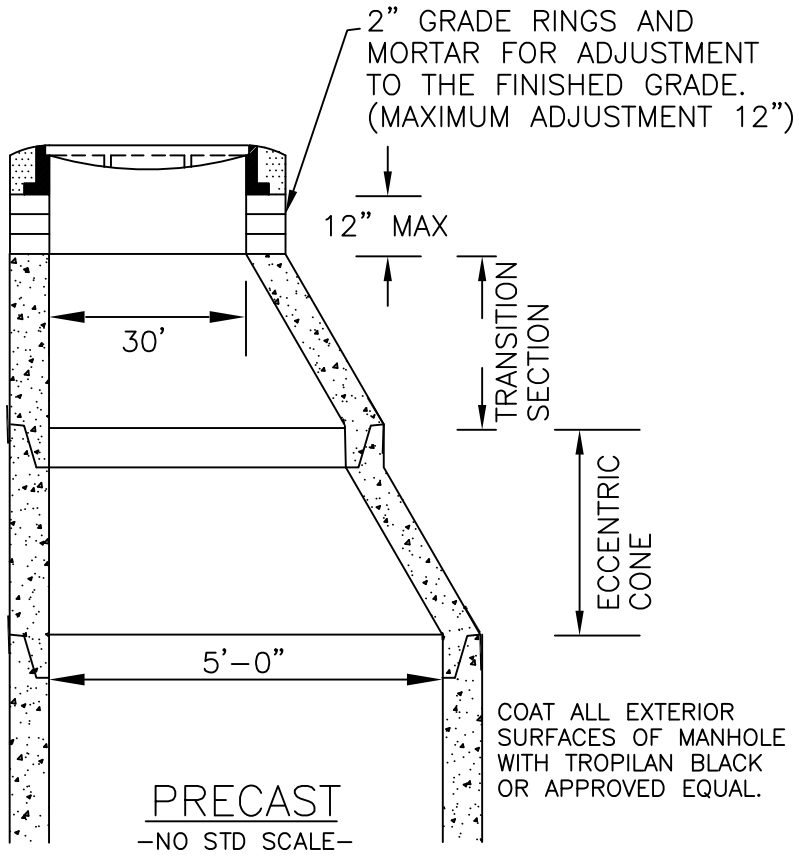

PRECAST

-NO STD SCALE-

SEE NOTES ON 48" PRECAST MANHOLE.

CAST IRON FRAME AND COVER FOR M.H. TO BE FURNISHED & INSTALLED BY CONTRACTOR.
SEE DETAILS COE-MHC-1 & COE-CIC-1

TRANSITION DETAILS

CITY OF EULESS

COE-TMH1 7/10

*PIPE TO BE CONTINUOUS THROUGH MANHOLE DURING CONSTRUCTION. USE MANHOLE COUPLINGS OR RUBBER RING WATER STOPS ON PIPE AT MAN-HOLE WALLS. USE CLASS "F" CONCRETE AROUND PIPE AT OUTSIDE OF OPENINGS.

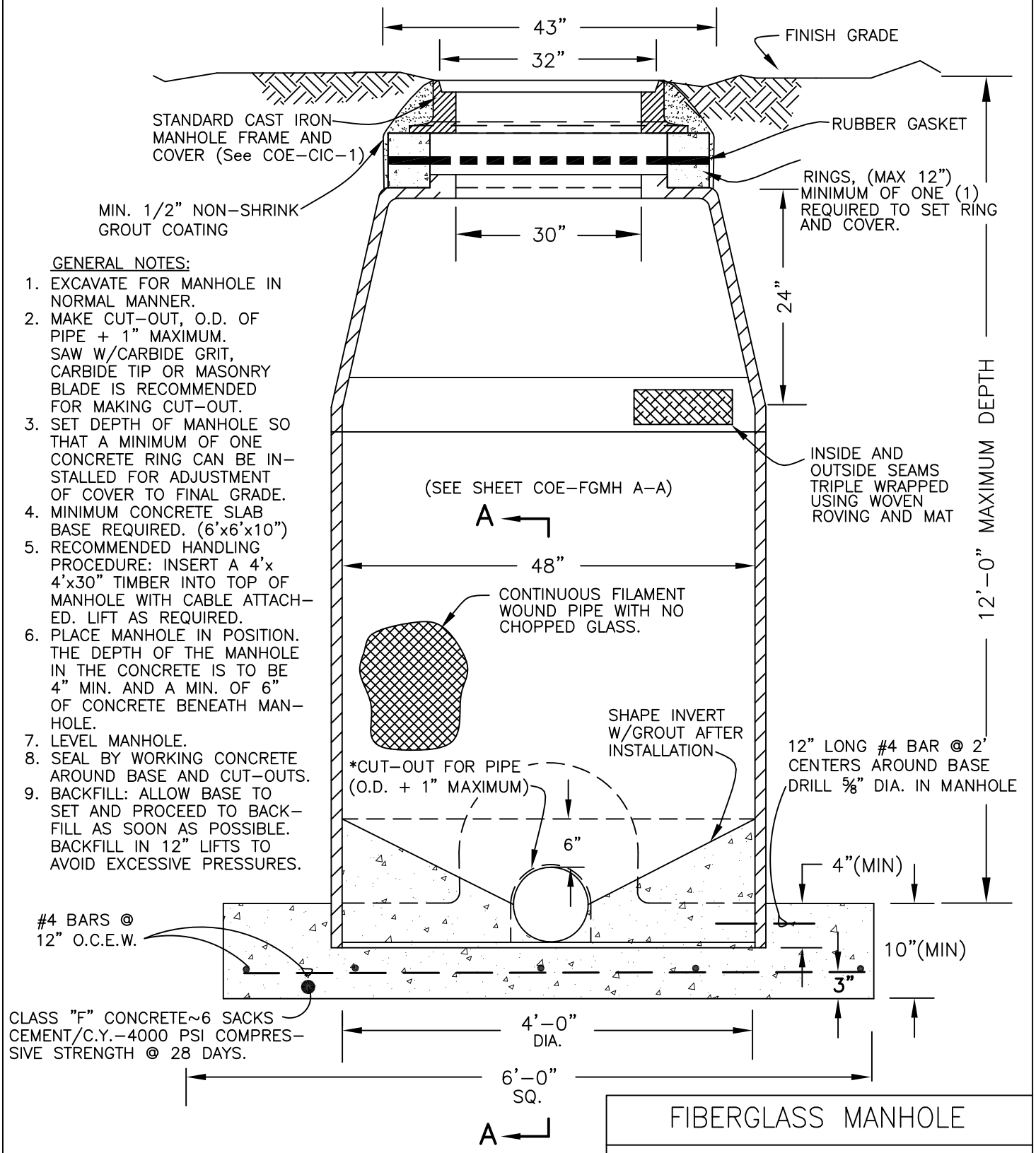

GENERAL NOTES:

1. EXCAVATE FOR MANHOLE IN NORMAL MANNER.
2. MAKE CUT-OUT, O.D. OF PIPE + 1" MAXIMUM. SAW W/CARBIDE GRIT, CARBIDE TIP OR MASONRY BLADE IS RECOMMENDED FOR MAKING CUT-OUT.
3. SET DEPTH OF MANHOLE SO THAT A MINIMUM OF ONE CONCRETE RING CAN BE IN-STALLED FOR ADJUSTMENT OF COVER TO FINAL GRADE.
4. MINIMUM CONCRETE SLAB BASE REQUIRED. (6'x6'x10")
5. RECOMMENDED HANDLING PROCEDURE: INSERT A 4'x 4'x30" TIMBER INTO TOP OF MANHOLE WITH CABLE ATTACH-ED. LIFT AS REQUIRED.
6. PLACE MANHOLE IN POSITION. THE DEPTH OF THE MANHOLE IN THE CONCRETE IS TO BE 4" MIN. AND A MIN. OF 6" OF CONCRETE BENEATH MAN-HOLE.
7. LEVEL MANHOLE.
8. SEAL BY WORKING CONCRETE AROUND BASE AND CUT-OUTS.
9. BACKFILL: ALLOW BASE TO SET AND PROCEED TO BACK-FILL AS SOON AS POSSIBLE. BACKFILL IN 12" LIFTS TO AVOID EXCESSIVE PRESSURES.

FIBERGLASS SANITARY SEWER MANHOLE

-NO STD SCALE-

(FOR USE OUTSIDE OF STREET R.O.W. AND PAVED AREAS ONLY)

FIBERGLASS MANHOLE

CITY OF EULESS

COE-FGMH 7/10

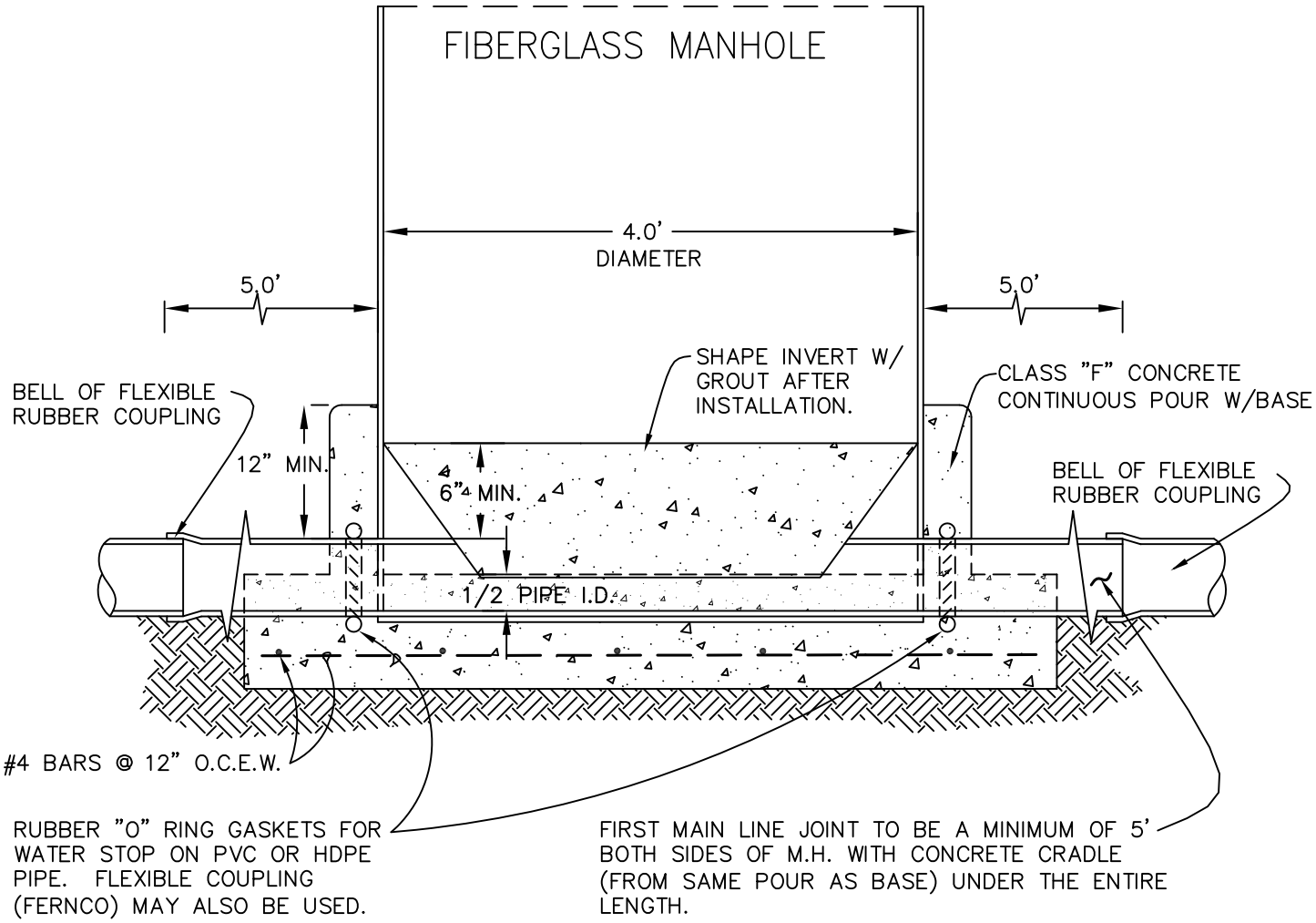

SECTION A–A

–NO STD SCALE–

FIBERGLASS MANHOLE	
CITY OF EULESS	
COE–FGMH A–A	7/10

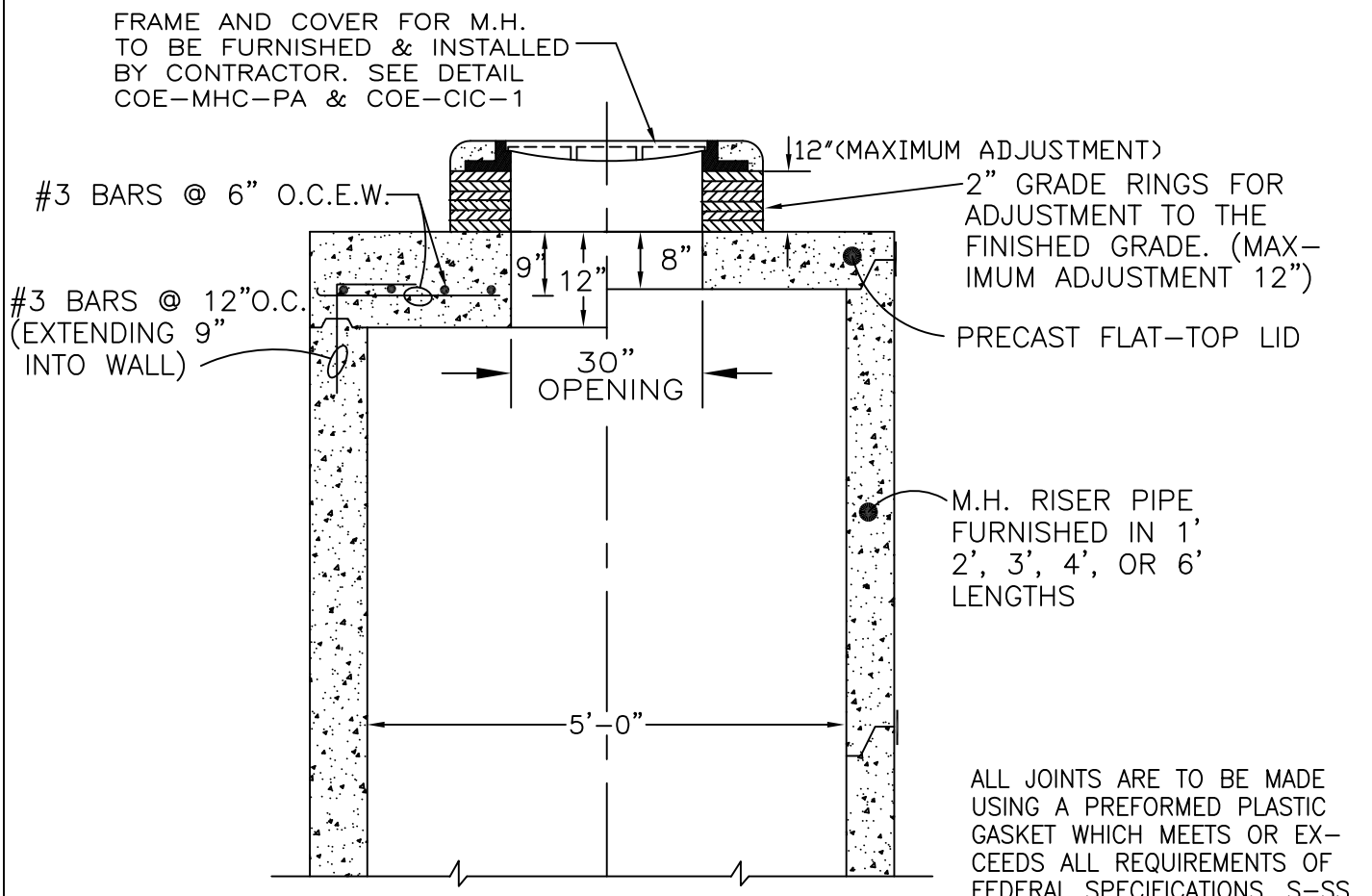

SECTION "A-A"

-NO STD SCALE-

ALL JOINTS ARE TO BE MADE USING A PREFORMED PLASTIC GASKET WHICH MEETS OR EXCEEDS ALL REQUIREMENTS OF FEDERAL SPECIFICATIONS, S-SS-00210 "SEALING COMPOUND PREFORMED PLASTIC FOR PIPE JOINTS", TYPE 1, ROPE FORM. SUCH PLASTIC GASKET SHALL BE RAM-NEK AS MANUFACTURED BY K.T. SNYDER CO., INC., HOUSTON, TEXAS OR AN APPROVED EQUAL. APPLICATION OF THE COMPOUND SHALL BE IN ACCORDANCE WITH THE MANUFACTURER'S RECOMMENDATIONS.

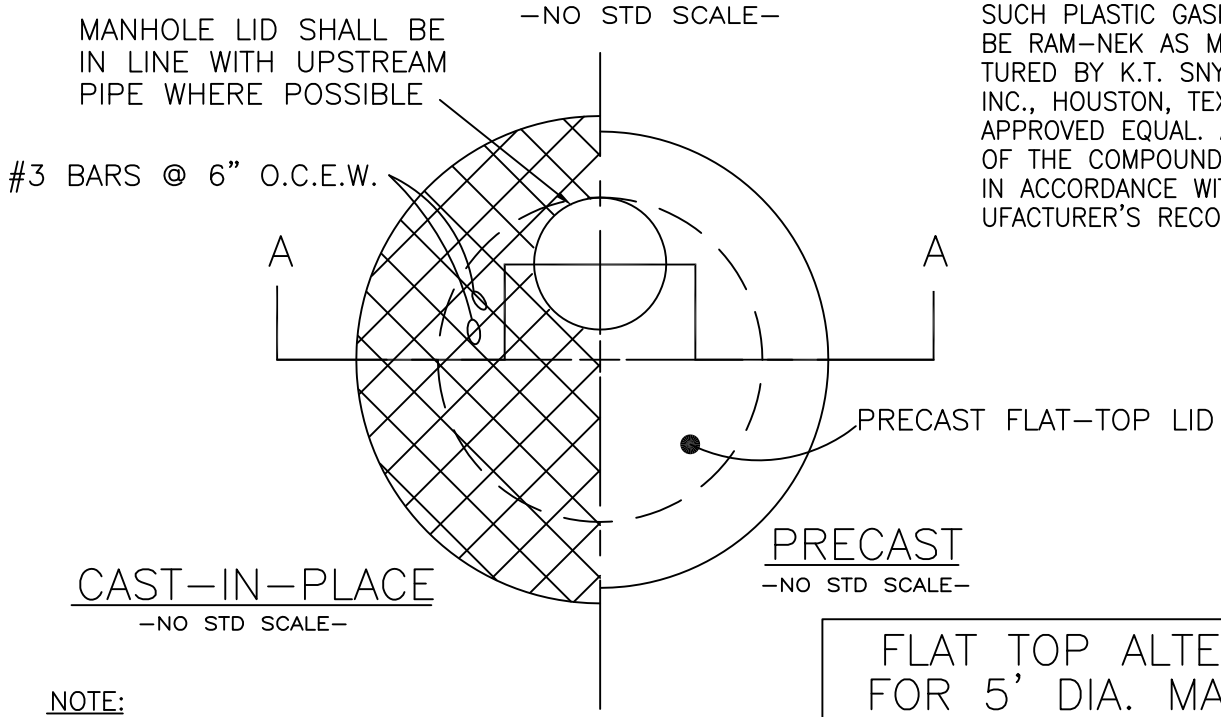

CAST-IN-PLACE

-NO STD SCALE-

PRECAST

-NO STD SCALE-

NOTE:

STANDARD MANHOLE FRAME AND COVER (See COE-CIC-1)

PLAN

-NO STD SCALE-

FLAT TOP ALTERNATE FOR 5' DIA. MANHOLE

CITY OF EULESS

COE-FTA-1 7/10

PAMREX 32 INCH MANHOLE COVER AND FRAME

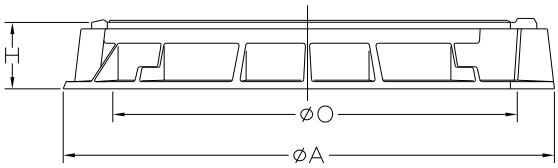

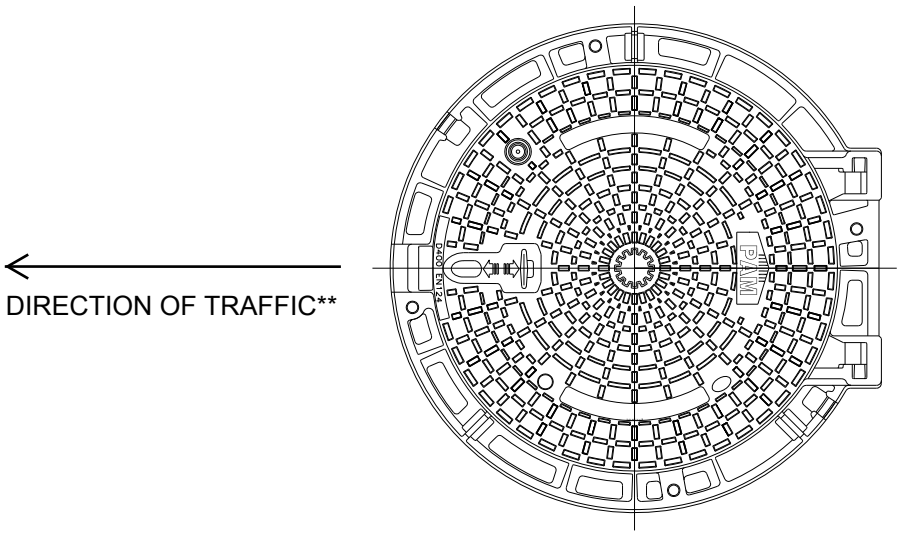

NOTES ON MANHOLE FRAMES AND COVERS:

1. FOR NEW SANITARY SEWER MANHOLES LOCATED IN BOTH PAVED AND NON-PAVED AREAS, THE FRAME AND COVER SHALL BE A PAMREX 32-INCH "RE 80 R8 FD"* MANHOLE COVER AND FRAME. THE COVER SHALL BE MARKED "SANITARY SEWER".

2. COVERS SHALL BE DUALLY HINGED AND INCORPORATE A 90 DEGREE BLOCKING SYSTEM TO PREVENT ACCIDENTAL CLOSURE. COVERS SHALL BE ONE MAN OPERABLE USING STANDARD TOOLS AND SHALL BE CAPABLE OF WITHSTANDING A TEST LOAD OF 80,000 LBS.

3. FRAMES SHALL BE CIRCULAR, INCORPORATE A SEATING RING AND A FITTED PLUG IN EACH HINGE HOUSING, AND BE AVAILABLE IN A 32-INCH CLEAR OPENING. THE FRAME DEPTH SHALL NOT EXCEED 5-INCHES AND THE FLANGE SHALL INCORPORATE BEDDING SLOTS, BOLT HOLES, AND LIFTING EYES. COVER AND FRAME SHALL BE MANUFACTURED FROM DUCTILE IRON.

4. ALL COMPONENTS SHALL BE BLACK COATED.

5. PAMREX PENTA LOCKING SYSTEM SHALL BE INCLUDED FOR SECURITY PURPOSES.

*OR APPROVED EQUAL

DIMENSIONS (INCHES)			WEIGHT (lbs)		REFERENCE ITEM NUMBER
A	O	H	COVER AND FRAME	COVER ONLY	
42	32	5	269	162	RE 80 R8 FD

****COVER SHALL BE ORIENTED SO THAT HINGE IS PERPENDICULAR TO TRAFFIC AND LID CLOSES IN THE DIRECTION OF TRAFFIC.**

STANDARD
MANHOLE FRAME AND COVER

CITY
OF
EULESS

COE-MHC PA 09/14

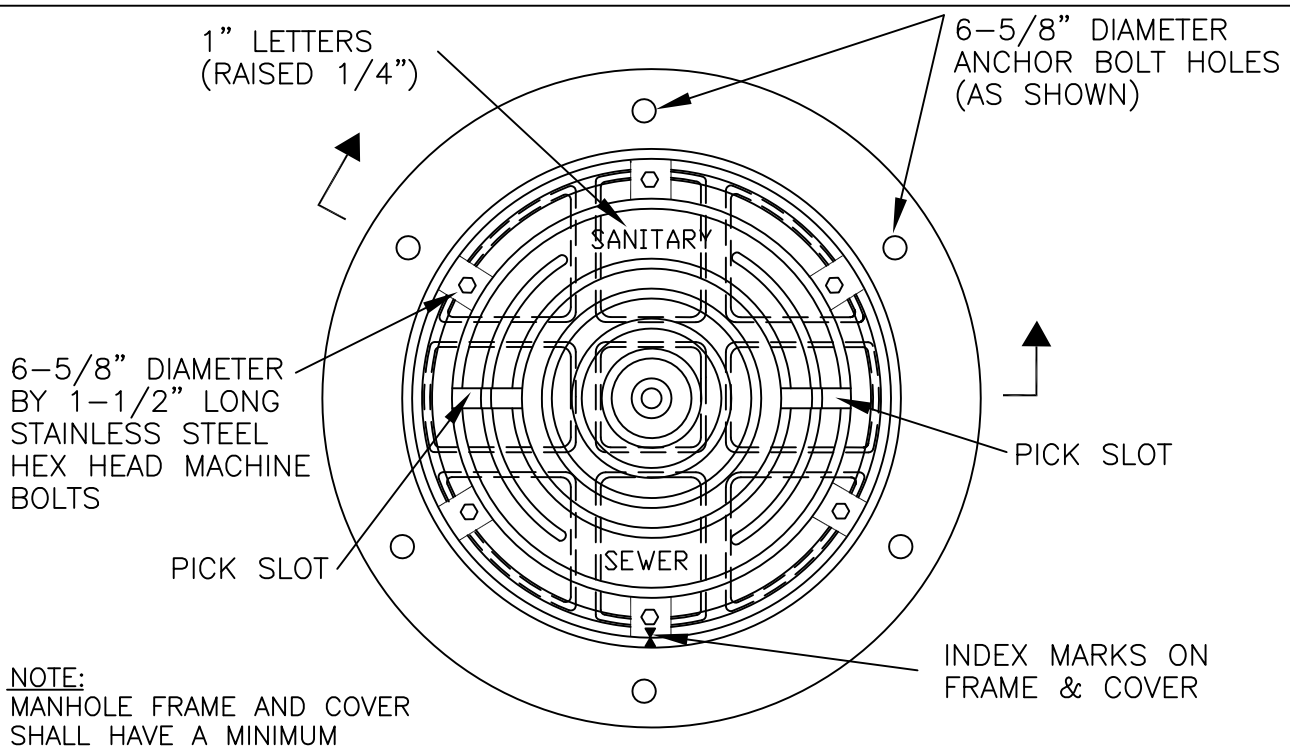

NOTE:
MANHOLE FRAME AND COVER SHALL HAVE A MINIMUM TOTAL WEIGHT OF 300 LBS. USE A 1/4" DIAMETER NEOPRENE "O" RING GASKET FOR SEAL BETWEEN FRAME AND COVER

PLAN VIEW

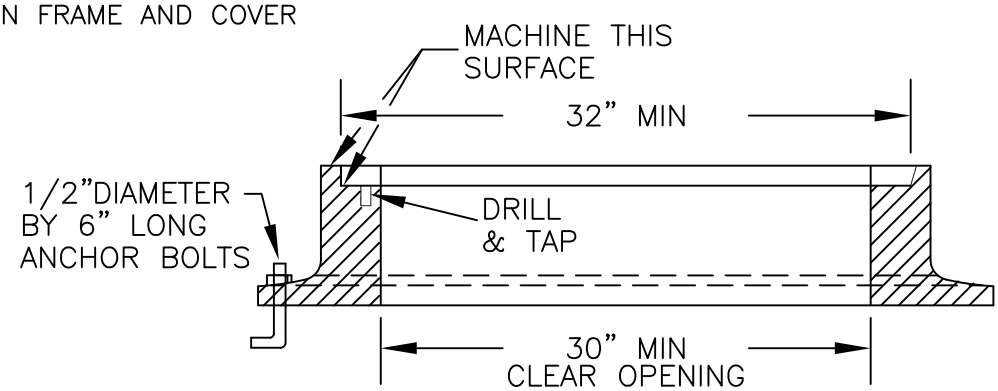

SECTION OF FRAME

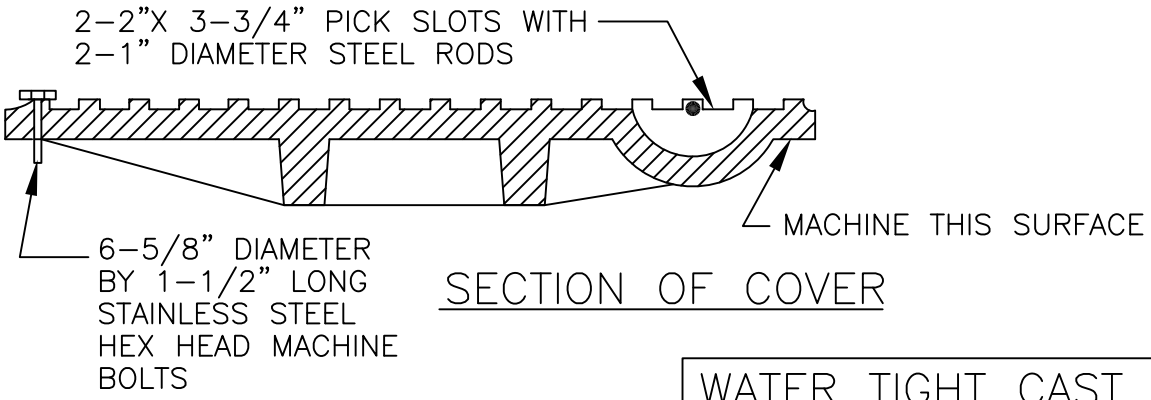

SECTION OF COVER

WATER TIGHT CAST IRON
MANHOLE FRAME AND COVER
-NO STD SCALE-

WATER TIGHT CAST IRON
MANHOLE FRAME & COVER

CITY
OF
EULESS

COE-WTC-1 7/10

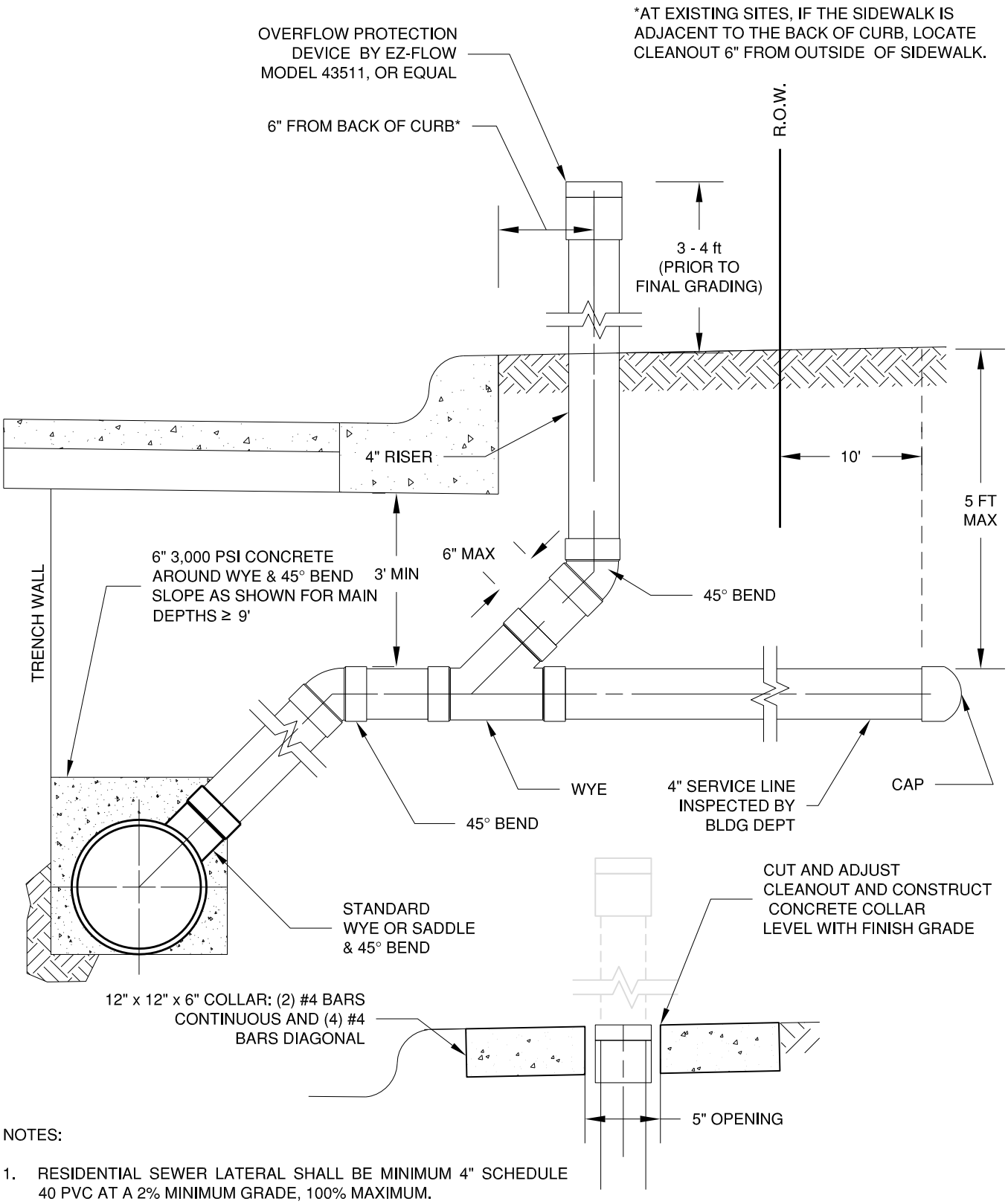

NOTES:

1. RESIDENTIAL SEWER LATERAL SHALL BE MINIMUM 4" SCHEDULE 40 PVC AT A 2% MINIMUM GRADE, 100% MAXIMUM.
2. SEWER LATERALS SHALL EXTEND TO A POINT 10 FT BEYOND RIGHT-OF-WAY LINE AND SHALL BE A MAXIMUM OF 5 FT DEEP.
3. DURING INITIAL LATERAL INSTALLATION, A 4" CLEANOUT SHALL BE BROUGHT 3-4 FT ABOVE GRADE AT THE R.O.W. LINE.
4. PRIOR TO FINAL GRADING, LATERAL LOCATION SHALL BE MARKED ON CURB AND, CONCRETE COLLAR CONSTRUCTED, AND CLEANOUT TO BE CUT TO FINAL GRADE.
5. CONCRETE SHALL BE 5 SACK, 3,000 PSI COMPRESSIVE STRENGTH AT 28 DAYS, 5" MAX SLUMP

SEWER SERVICE & CLEANOUT

CITY OF EULESS

COE–CO–1 2/16

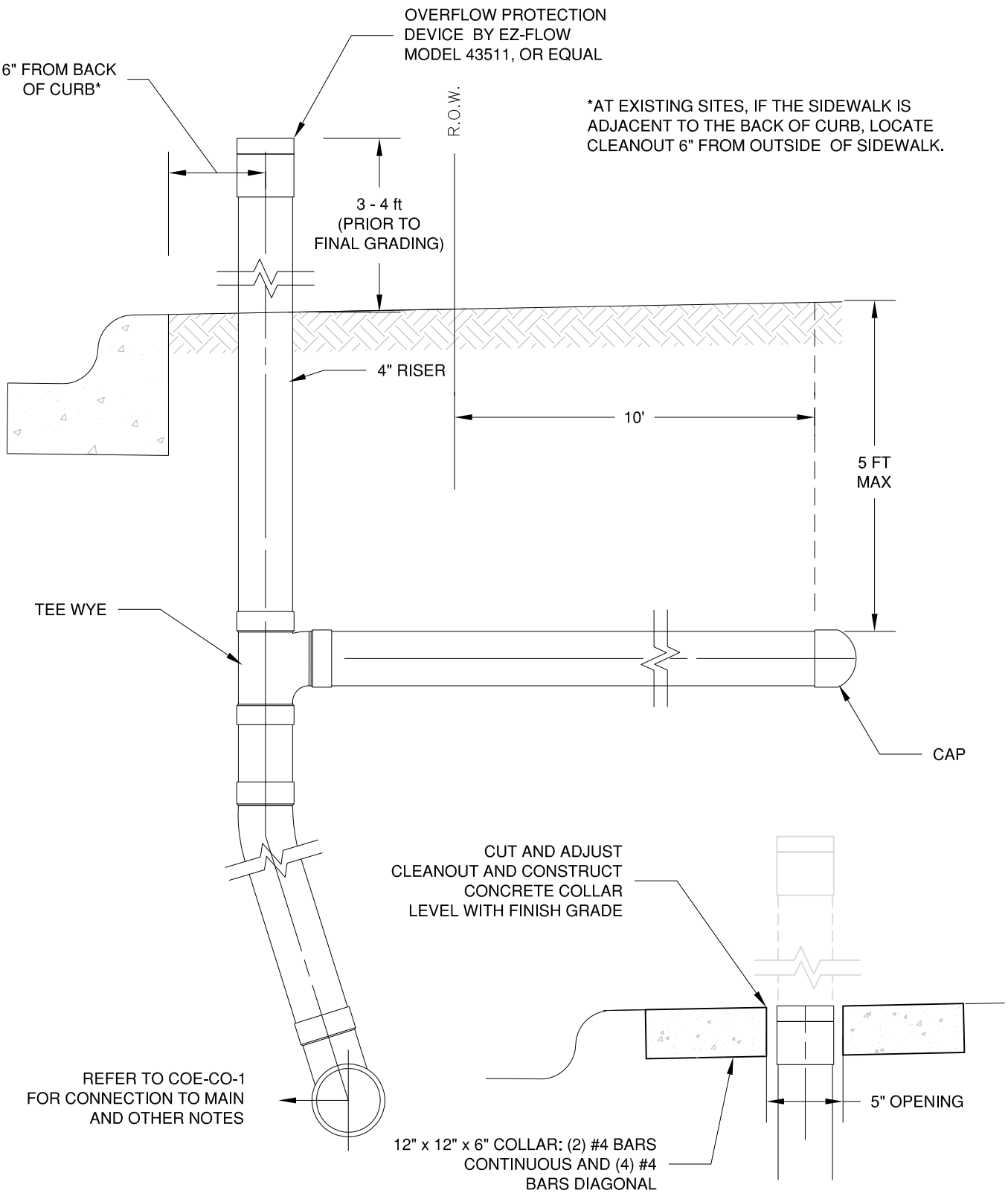

NOTES:

1. SEE STANDARD DETAIL COE-CO-1 FOR NOTES
2. THIS DETAIL APPLIES FOR SHORT SERVICE LINES WHERE THE CITY MAIN IS WITHIN THE ROW ON THE SAME SIDE AS THE BUILDING TO BE SERVICED

SEWER SERVICE & CLEANOUT #2

CITY OF EULESS

COE–CO–2

2/16

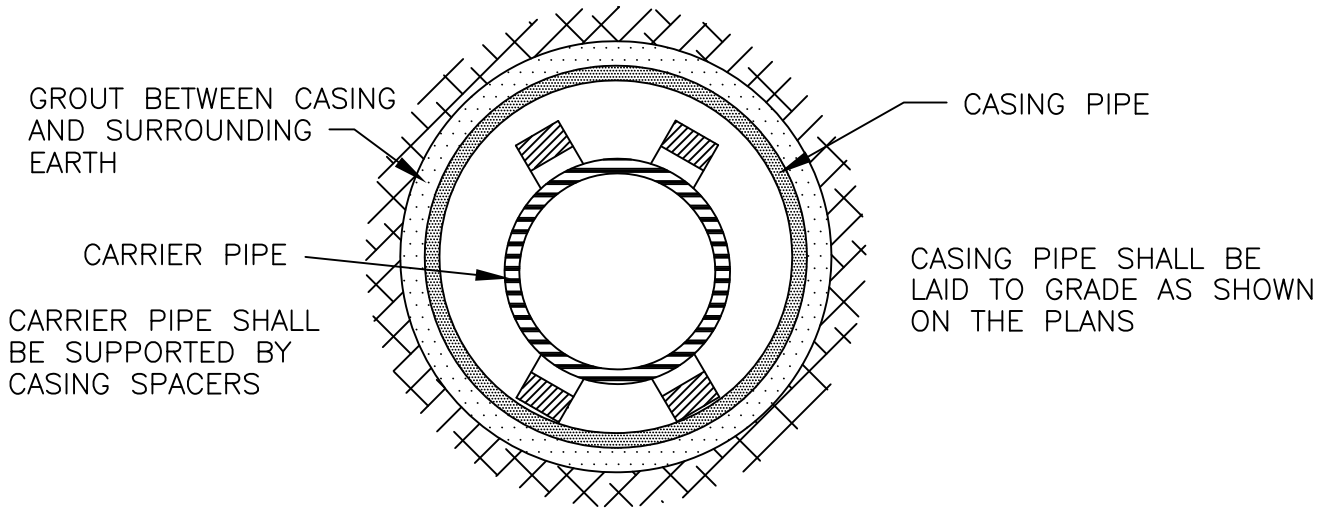

CASING DETAIL

–NO SCALE–

REQUIREMENTS FOR WATER LINE IN CASING:

1. WATER LINES SHALL BE PLACED IN A CASING WHERE THE LINES ARE INSTALLED:
   A. UNDER EXISTING PERMANENT PAVEMENT ON STREETS WITH A CLASSIFICATION OF "COLLECTOR" OR HIGHER.
   B. CROSSING EXISTING OR PROPOSED HIGHWAY RIGHTS–OF–WAY.
   C. IN EASEMENTS BETWEEN HOUSES, BUILDING STRUCTURES, AND/OR OTHER CONFINED WORKING AREAS AS DETERMINED BY THE CITY ENGINEER.
2. ACCEPTABLE MATERIALS FOR USE AS CASINGS FOR WATER LINE IMPROVEMENTS ARE REINFORCED CONCRETE PIPE (RCP); WELDED STEEL PIPE; AND CORRUGATED METAL PIPE (CMP). THE DESIGN ENGINEER SHALL DETERMINE AND SPECIFY ON THE PLAN DRAWINGS THE CASING MATERIAL TYPE, DIAMETER, METHOD OF INSTALLATION, AND OTHER PERTINENT INFORMATION REGARDING THE CASING PIPE.
3. THE CASING PIPE MAY BE INSTALLED BY JACKING, TUNNELING, BORING, OPEN CUT, ETC. THE METHOD USED SHALL BE DETERMINED BY THE DESIGN ENGINEER, SUBJECT TO THE APPROVAL OF THE CITY ENGINEER, AND SHALL BE SHOWN ON THE PLAN DRAWINGS.
4. CARRIER PIPE (WATER LINE) MAY BE POLYVINYL CHLORIDE (PVC), DUCTILE IRON (DI), CAST IRON (CI), OR CONCRETE PRESSURE PIPE (RCCP). THE TYPE OF CARRIER PIPE SHALL BE SPECIFIED ON THE PLANS.
5. CARRIER PIPE SHALL BE SUPPORTED IN THE CASING USING CASING SPACERS AS MANUFACTURED BY ADVANCED PRODUCTS AND SYSTEMS, INC., LAFAYETTE, LOUISIANA OR APPROVED EQUAL. SPACERS SHALL BE POLYETHYLENE (MODEL CI), STAINLESS STEEL (MODEL SSI), OR CARBON STEEL (MODEL SI), DEPENDENT ON THE MATERIAL AND DIAMETER OF THE CARRIER PIPE. CARBON STEEL SPACERS SHALL HAVE FUSION BONDED EPOXY OR PVC COATINGS. ALL SPACERS SHALL BE INSTALLED I.A.W. MANUFACTURER'S RECOMMENDATIONS.
6. CASING END SEALS: END SEALS FOR THE CASING SHALL BE 1/8–INCH THICK SYNTHETIC RUBBER SEALS SECURED TO THE CASING AND THE CARRIER PIPE WITH STAINLESS STEEL BANDING STRAPS WITH WORM GEAR MECHANISM. THE SEALS SHALL BE PULL–ON (MODEL AC), OR WRAP–AROUND (MODEL AS), ALL AS MANUFACTURED BY ADVANCED PRODUCTS AND SYSTEMS, OR AN APPROVED EQUAL.

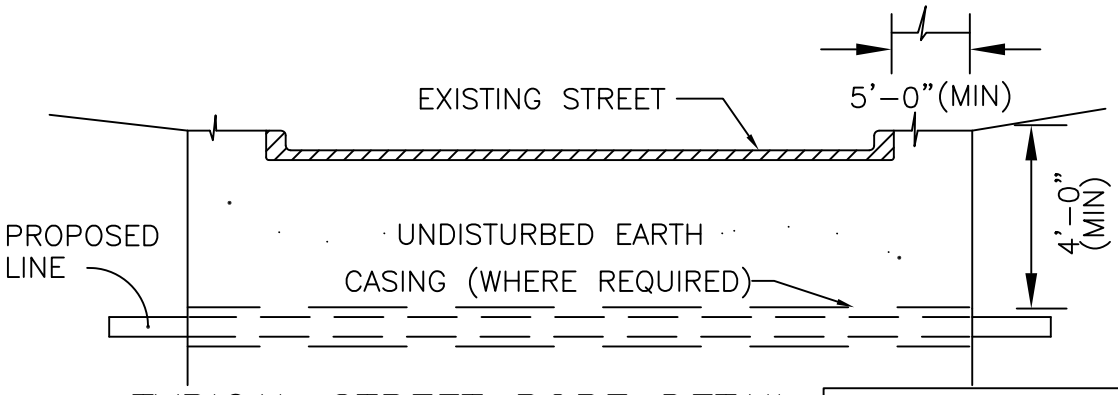

TYPICAL STREET BORE DETAIL

–NO SCALE–

NOTE:
SIZE OF THE BORE SHALL BE THE OPTION OF THE CONTRACTOR, UNLESS OTHERWISE SPECIFIED. PRESSURE GROUT AROUND THE CASING (WHERE USED) OR AROUND THE CARRIER PIPE WITH NO CASING.

CASING/BORE DETAIL

CITY OF EULESS

COE–CB–2 2/99

III

STORM DRAINAGE DETAILS

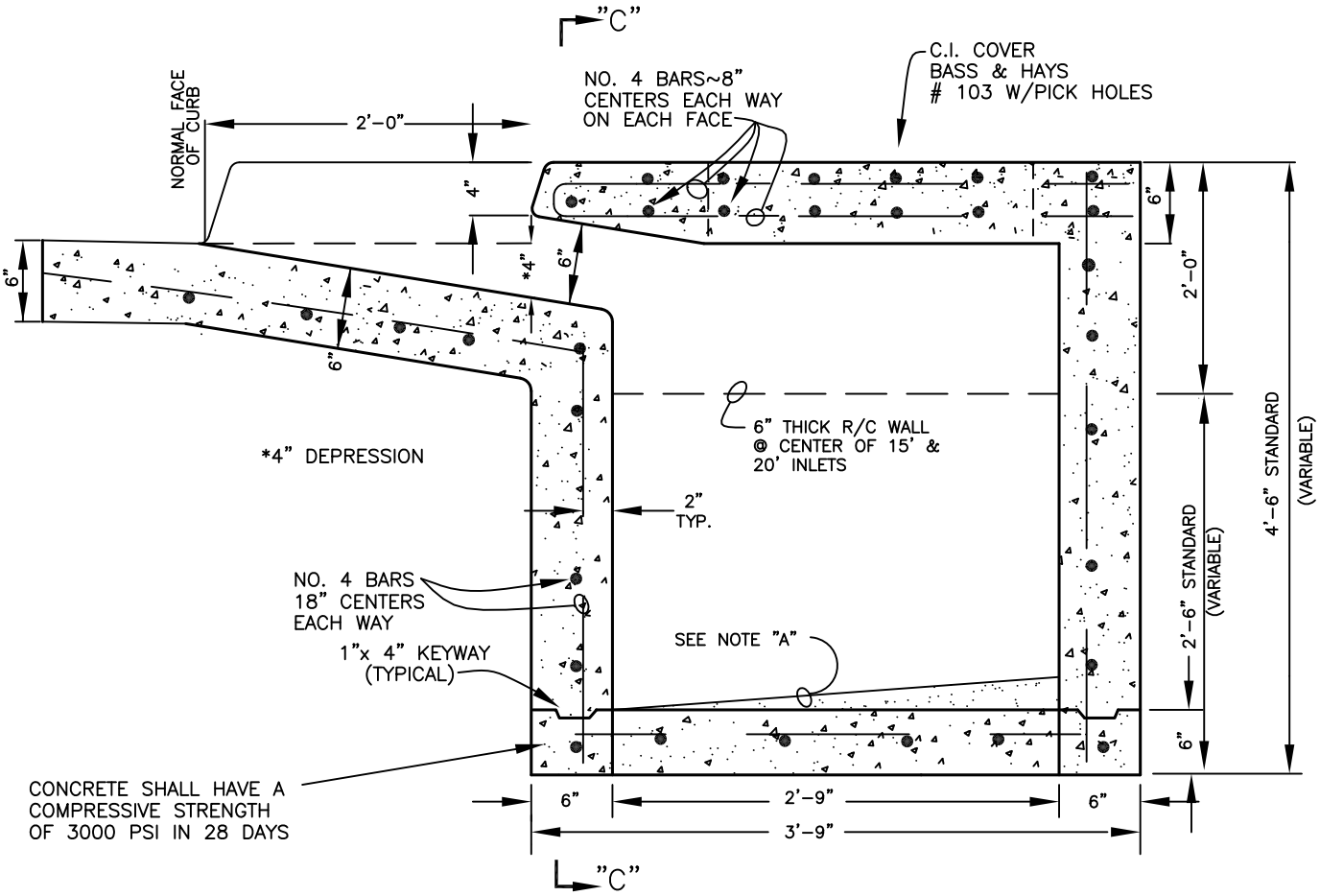

NOTE "A":
INSTALL CEMENT GROUT (1 PART CEMENT, 2 PARTS SHARP SAND) FROM PIPE INVERT AT INLET, TO ALL WALLS OF THE INLET AT A SLOPE OF NOT LESS THAN 1/4" PER 1 FOOT (2%).

SECTION "B-B"

-NOT STD. SCALE-

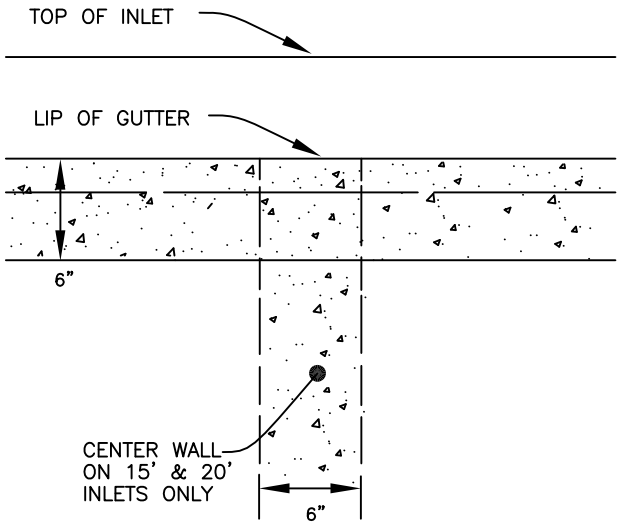

SECTION "C-C"

-NOT STD. SCALE-

CURB INLET DETAILS (RECESSED)

CITY OF EULESS

COE-RCI-1

7/10

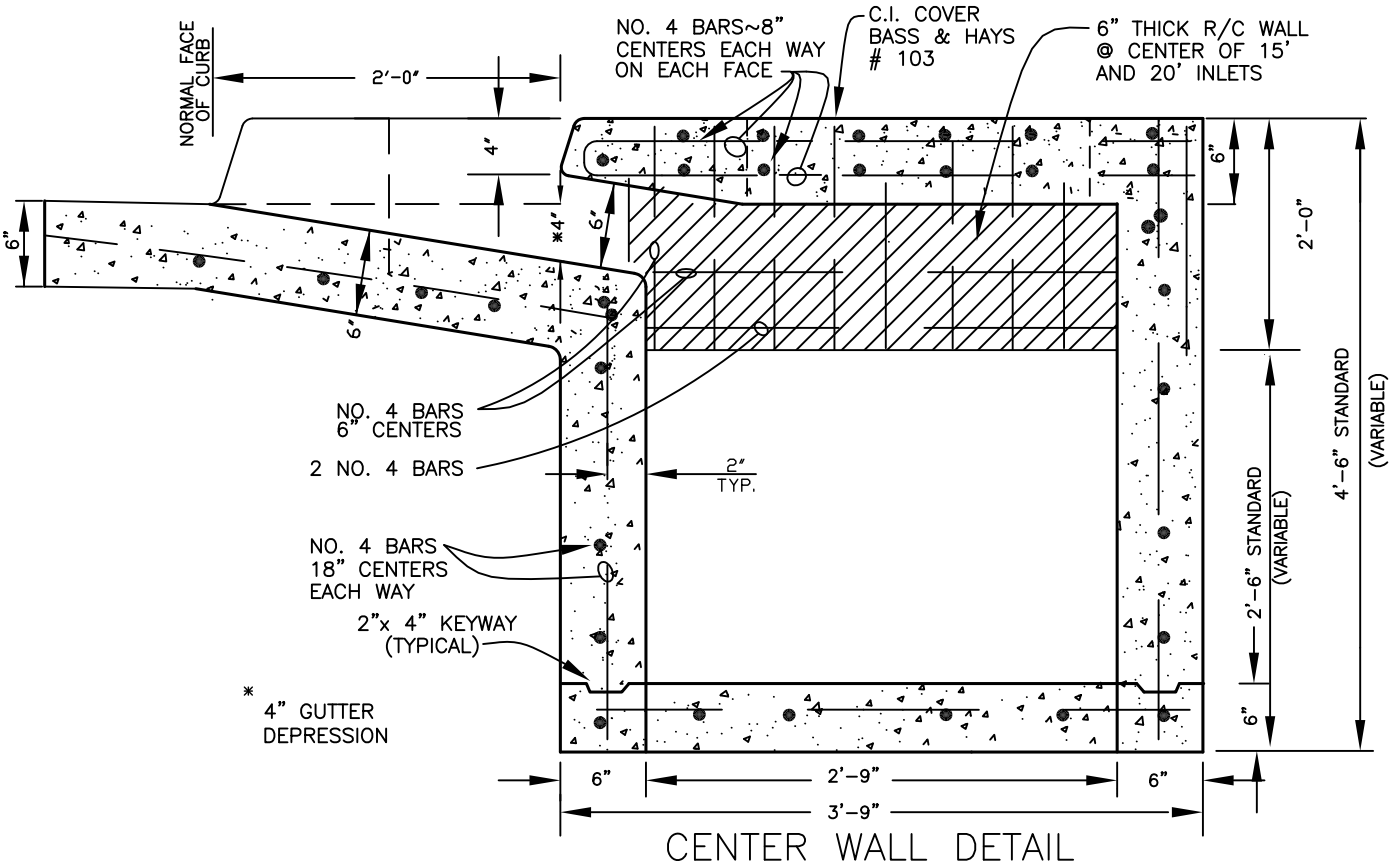

CENTER WALL DETAIL
15' & 20' INLETS ONLY
-NO SCALE-

GENERAL NOTES:

1. CONSTRUCTION SPECIFICATIONS SHALL BE THE 1993 EDITION OF THE "STANDARD SPECIFICATIONS FOR CONSTRUCTION OF HIGHWAYS, STREETS, AND BRIDGES" AS PUBLISHED BY TxDOT.
2. ALL CONCRETE SHALL BE CLASS "A" CONCRETE HAVING A MINIMUM COMPRESSIVE STRENGTH OF 3000 PSI IN 28 DAYS. TYPE 2 WHITE PIGMENTED CURING COMPOUND IS REQUIRED.
3. ALL EXPOSED CORNERS SHALL BE CHAMFERED 3/4" UNLESS OTHERWISE NOTED.
4. REINFORCING STEEL SHALL BE ASTM, A615~GRADE 40.
5. ALL BACKFILL AROUND THE INLETS SHALL BE MECHANICALLY TAMPED TO 95% OF THE STANDARD PROCTOR DENSITY, AASHTO TEXT T-99-74, WET SIDE OF OPTIMUM.
6. OUTSIDE FORMS ON INLETS ARE REQUIRED.
7. THE MANHOLE IS TO BE CONSTRUCTED OVER THE OUTLET AND THE CAST IRON MANHOLE COVER IS TO BE FASTENED TO THE CONCRETE WITH A CHAIN OF 3/16" STOCK WITH A 3/8" CARRIAGE BOLT IN THE COVER.
8. ALL CURB INLETS SHALL BE CONSTRUCTED IN TWO (2) STAGES. THE INLET TOP AND CURB AND GUTTER TRANSITIONS SHALL BE CONSTRUCTED ONLY FOLLOWING INSTALLATION OF CURB AND GUTTER ON THE STREET. FOR STREETS WITH CONCRETE PAVEMENT, BLOCKOUTS FOR THE INLETS AND INLET TRANSITIONS SHALL BE PROVIDED.

CURB INLET DETAILS (RECESSED)	
CITY OF EULESS	
COE-RCI2	7/08

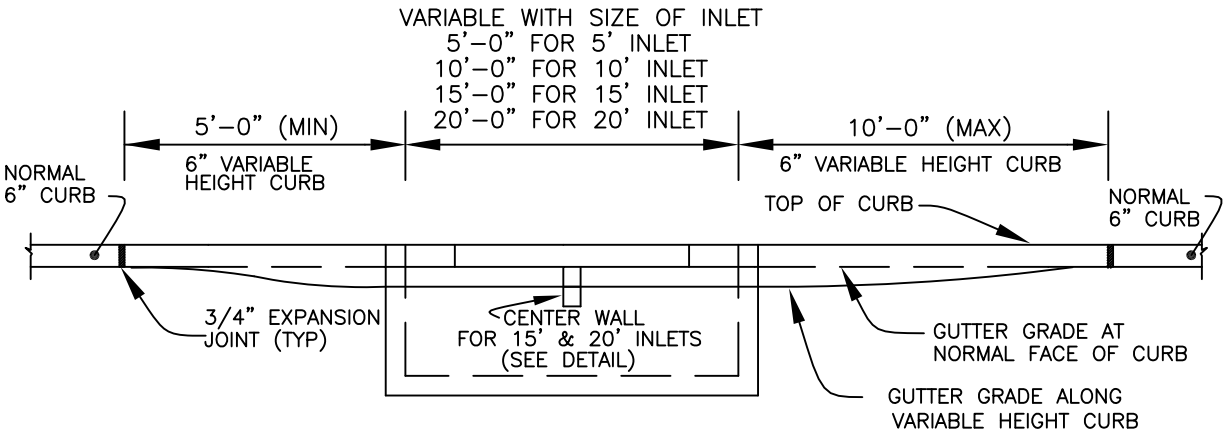

SECTION "A-A"

-NO STD SCALE-

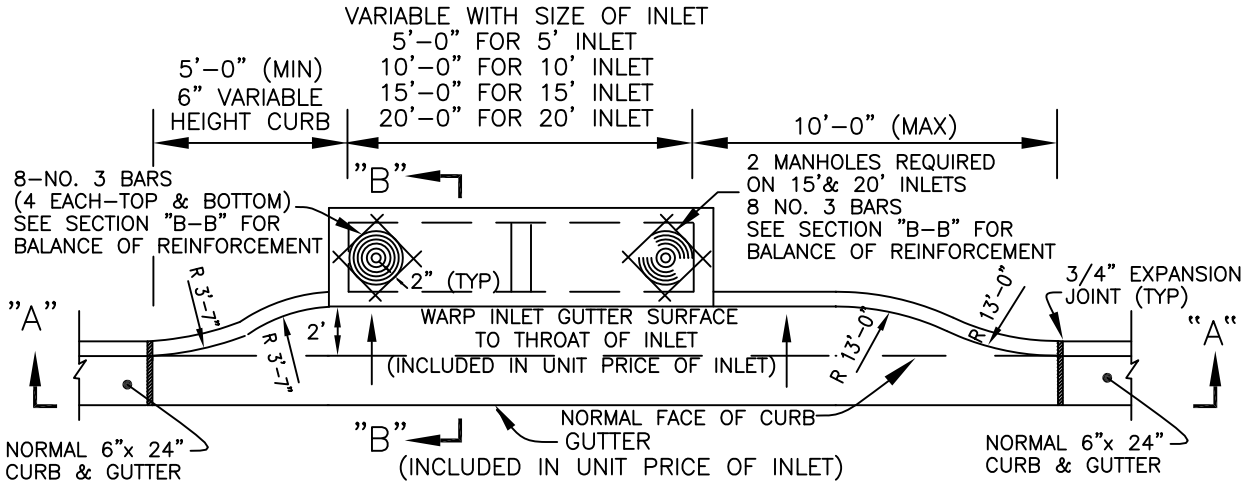

PLAN

GRADE INLET

-NO STD SCALE-

CURB INLET DETAILS (RECESSED)	
CITY OF EULESS	
COE-RCI 3	8/10

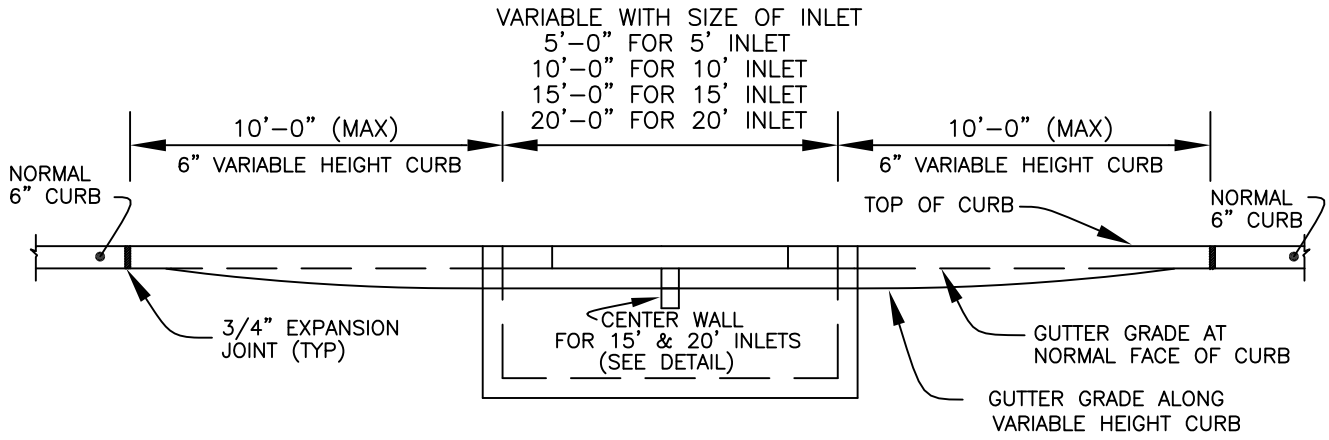

SECTION "A-A"

-NO STD SCALE-

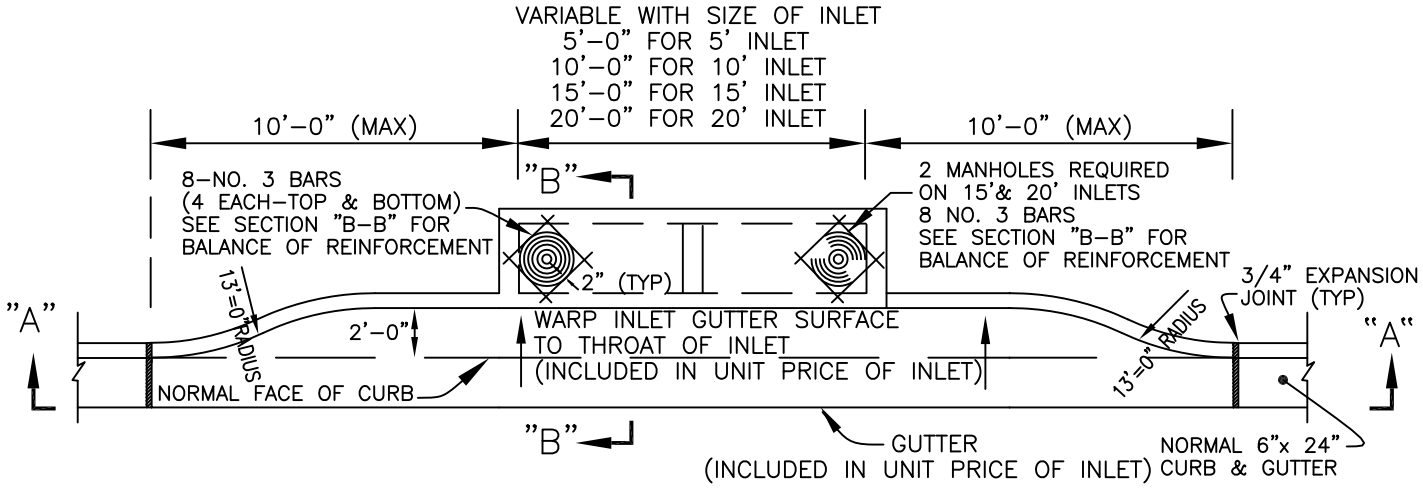

PLAN

LOW POINT INLET

-NO STD SCALE-

CURB INLET DETAILS (RECESSED)

CITY OF EULESS

COE-RCI 4

8/10

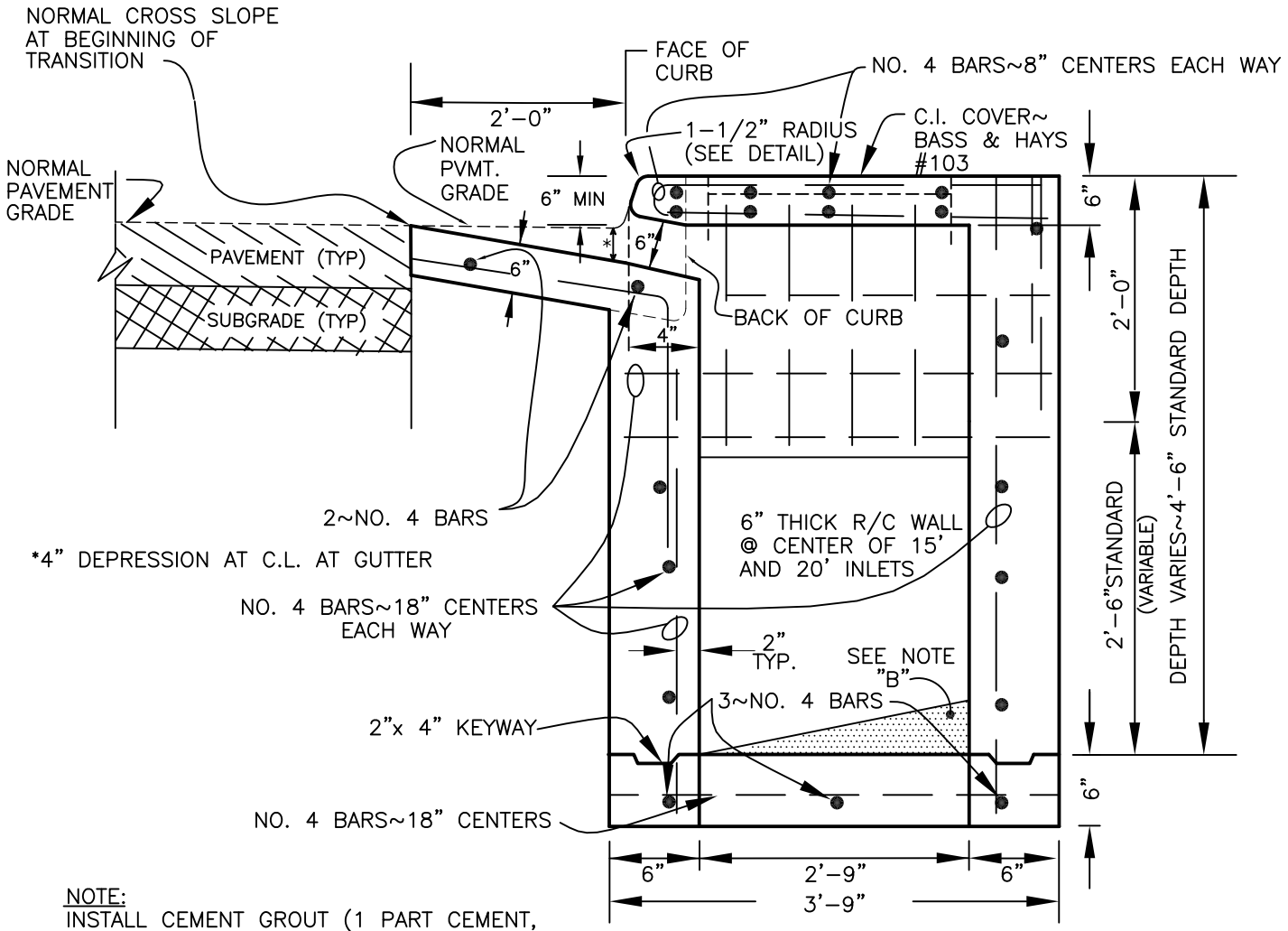

SECTION B-B

-NO STD SCALE-

NOTE:
INSTALL CEMENT GROUT (1 PART CEMENT, 2 PARTS SHARP SAND) FROM PIPE INVERT AT INLET, TO ALL WALLS OF THE INLET AT A SLOPE OF N.L.T. 1/4" PER 12". LONGITUDINAL AND TRANSVERSE REINFORCEMENT IN THE INLET TOP SHALL BE STOPPED 1-1/2" FROM THE MANHOLE RING ON ALL SIDES. SEE PLAN VIEW FOR ADDITIONAL DIAGONAL REINFORCEMENT AROUND MANHOLE RING.

GENERAL NOTES:

1. CONSTRUCTION SPECIFICATIONS SHALL BE THE 1993 EDITION OF THE "STANDARD SPECIFICATIONS FOR CONSTRUCTION OF HIGHWAYS, STREETS, AND BRIDGES" AS PUBLISHED THE TxDOT.
2. ALL CONCRETE SHALL BE CONCRETE HAVING A MINIMUM COMPRESSIVE STRENGTH OF 3000 P.S.I. IN 28 DAYS, TYPE 2 WHITE PIGMENTED CURING COMPOUND IS REQUIRED.
3. ALL EXPOSED CORNERS SHALL BE CHAMFERED 3/4" UNLESS OTHERWISE NOTED.
4. REINFORCING STEEL SHALL BE ASTM, A615~GRADE 40.
5. ALL BACKFILL AROUND THE INLETS SHALL BE MECHANICALLY TAMPED TO 95% OF THE STANDARD PROCTOR DENSITY, ASTM-D-698, WET SIDE OF OPTIMUM.
6. REMOVAL AND DISPOSAL OFF OF THE PROJECT SITE OF EXISTING CURB AND GUTTER TO ACCOMODATE INLET CONSTRUCTION IS SUBSIDIARY TO THE UNIT PRICE BID PER EACH FOR VARIOUS SIZES OF CURB INLETS.
7. OUTSIDE FORMS ON INLETS ARE REQUIRED.

CURB INLET DETAIL (NON-RECESSED)

CITY OF EULESS

COE-NRC 1 6/08

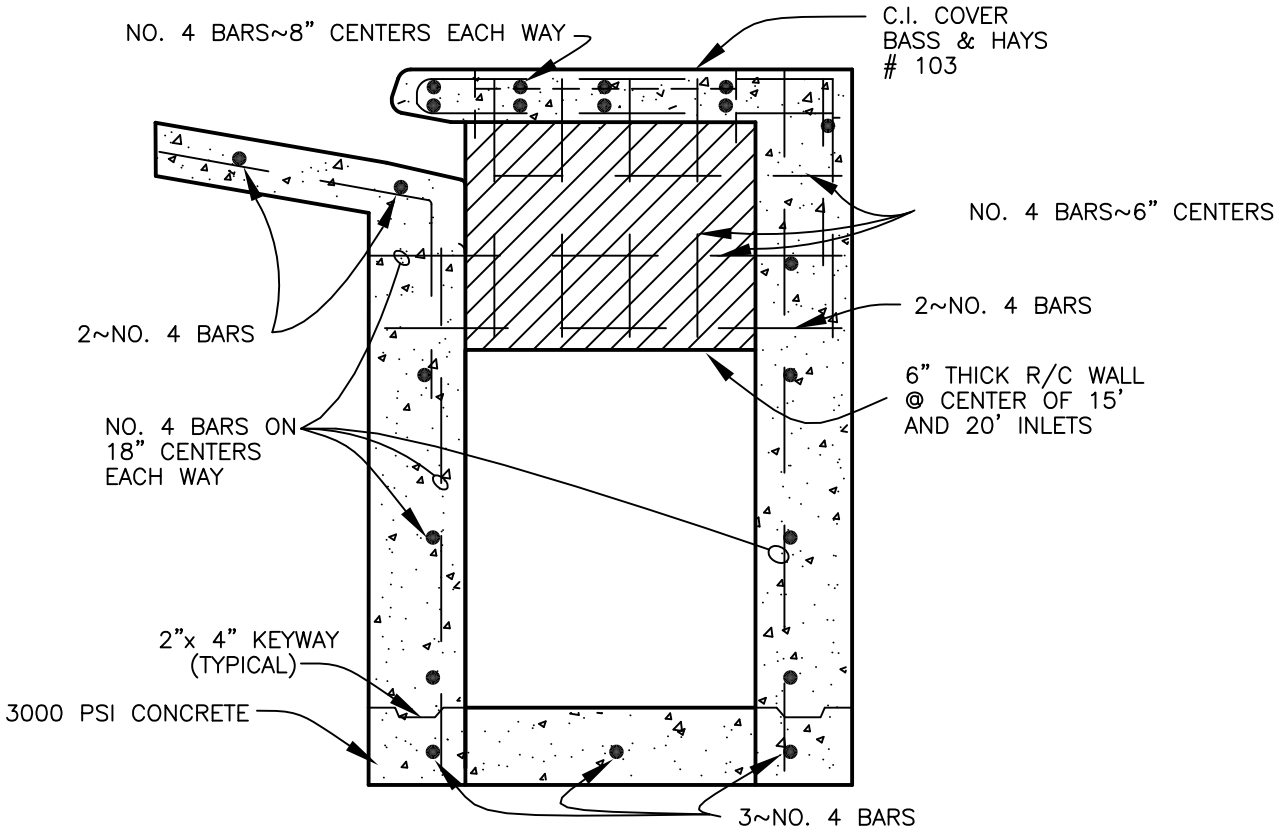

15' & 20' INLET CENTER WALL DETAIL

–NO STD SCALE–

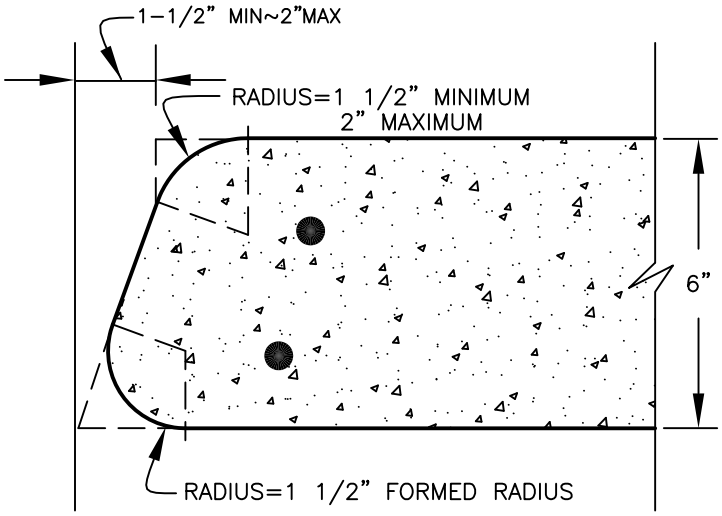

CURB SECTION AT INLET

–NO STD SCALE–

CURB INLET DETAILS (NON–RECESSED)	
CITY OF EULESS	
COE–NRC 2	8/10

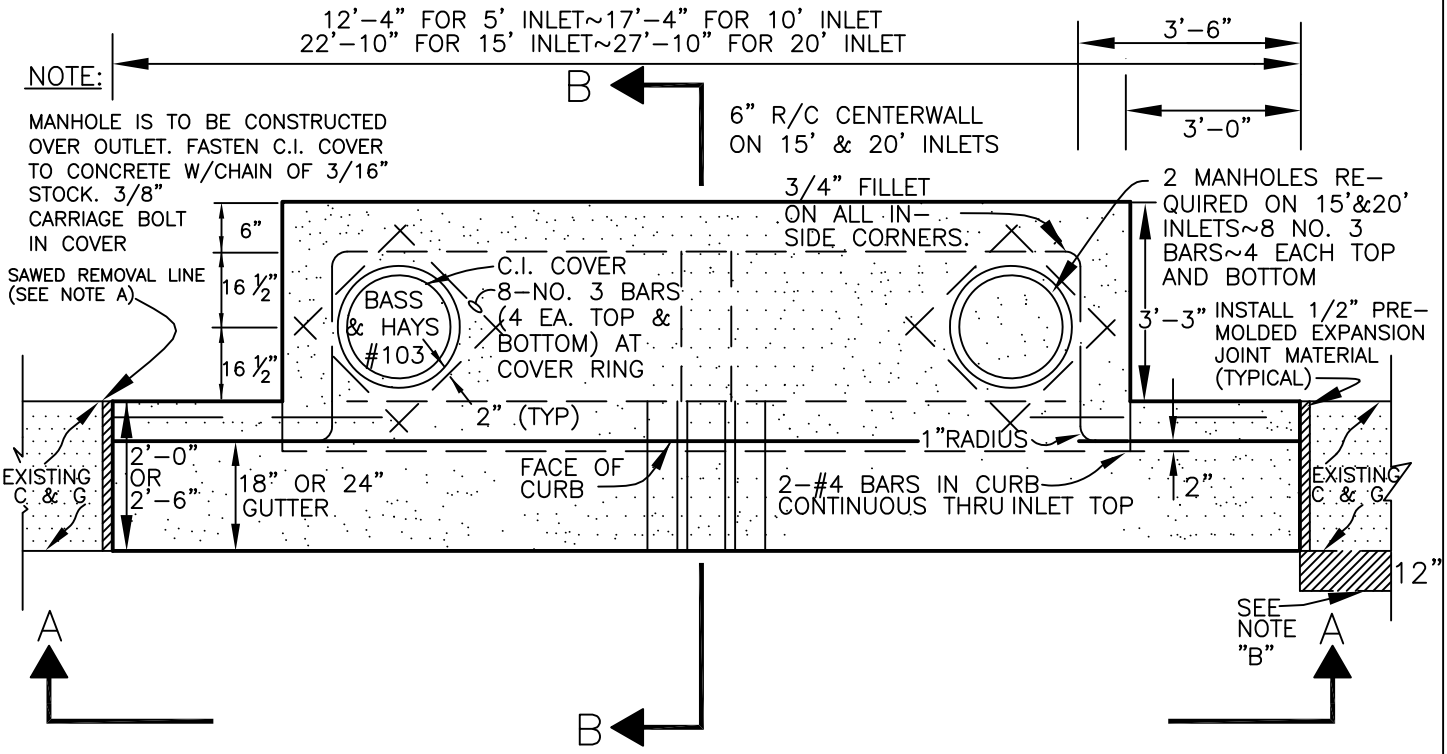

PLAN VIEW

-NO STD SCALE-

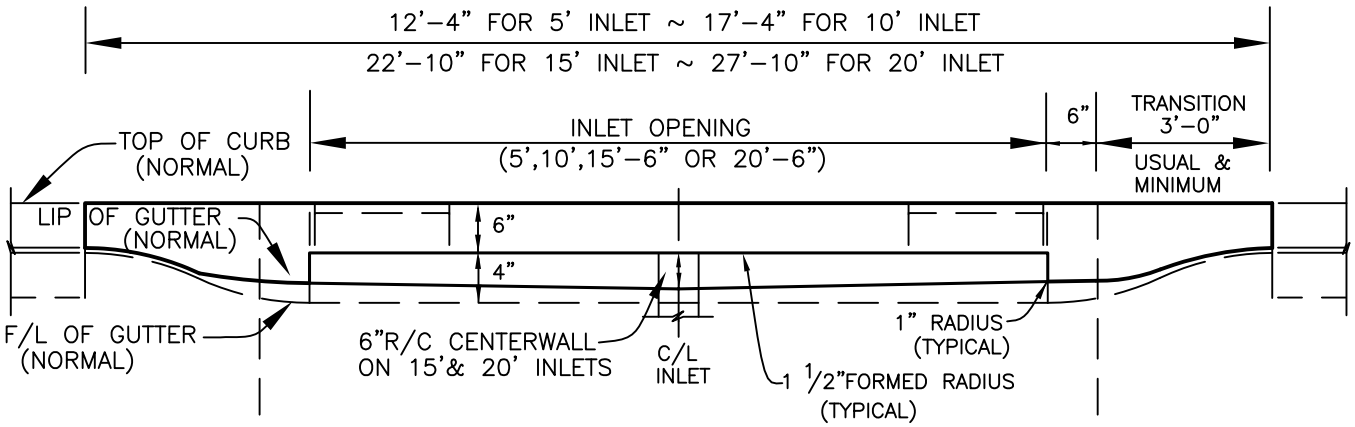

SECTION A-A

-NO STD SCALE-

NOTE "A":
IF A MARKED JOINT OR EXPANSION JOINT EXISTS IN THE CURB AND GUTTER WITHIN 3'-0" OF THE PLAN REMOVAL LIMIT, THE CURB AND GUTTER SHALL BE REMOVED TO THE MARKED OR EXPANSION JOINT. SEE ALSO NOTE "B".

NOTE "B""
INSTALL CEMENT GROUT (1 PART CEMENT, 2 PARTS SHARP SAND) FROM PIPE INVERT AT INLET, TO ALL WALLS OF THE INLET AT A SLOPE OF N.L.T. 1/4" PER 12".

CURB INLET DETAILS (NON-RECESSED)

CITY OF EULESS

COE-NRC 3 8/10

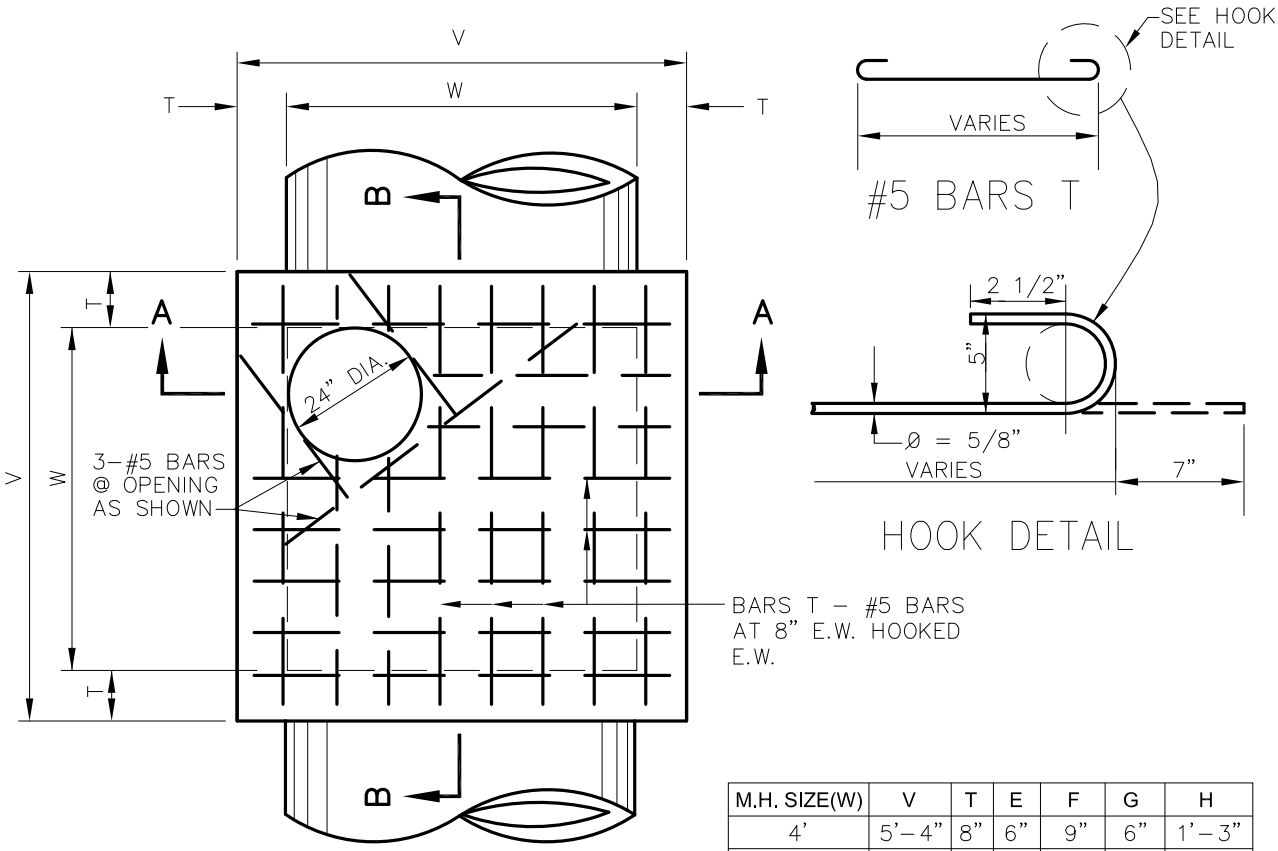

PLAN

NO STD SCALE

M.H. SIZE(W)	V	T	E	F	G	H
4'	5'-4"	8"	6"	9"	6"	1'-3"
5'	6'-4"	8"	6"	12"	8"	1'-8"
6'	7'-6"	9"	9"	16"	10"	2'-2"

TABLE OF DIMENSIONS

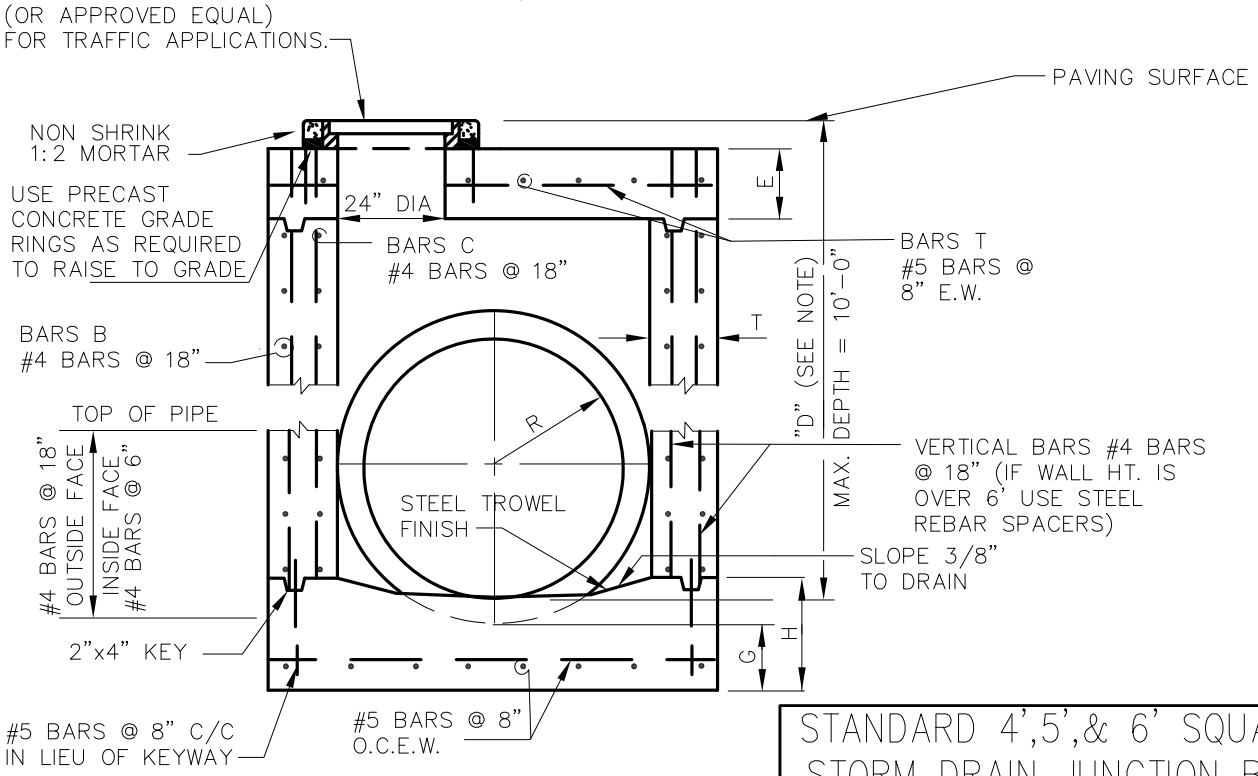

SECTION A-A

NO STD SCALE

NOTE:
DEPTH "D" SHALL BE SHOWN ON STORM DRAIN PLAN AND PROFILE SHEET

STANDARD 4',5',& 6' SQUARE STORM DRAIN JUNCTION BOX

CITY OF EULESS

COE-SDJB 1

8/09

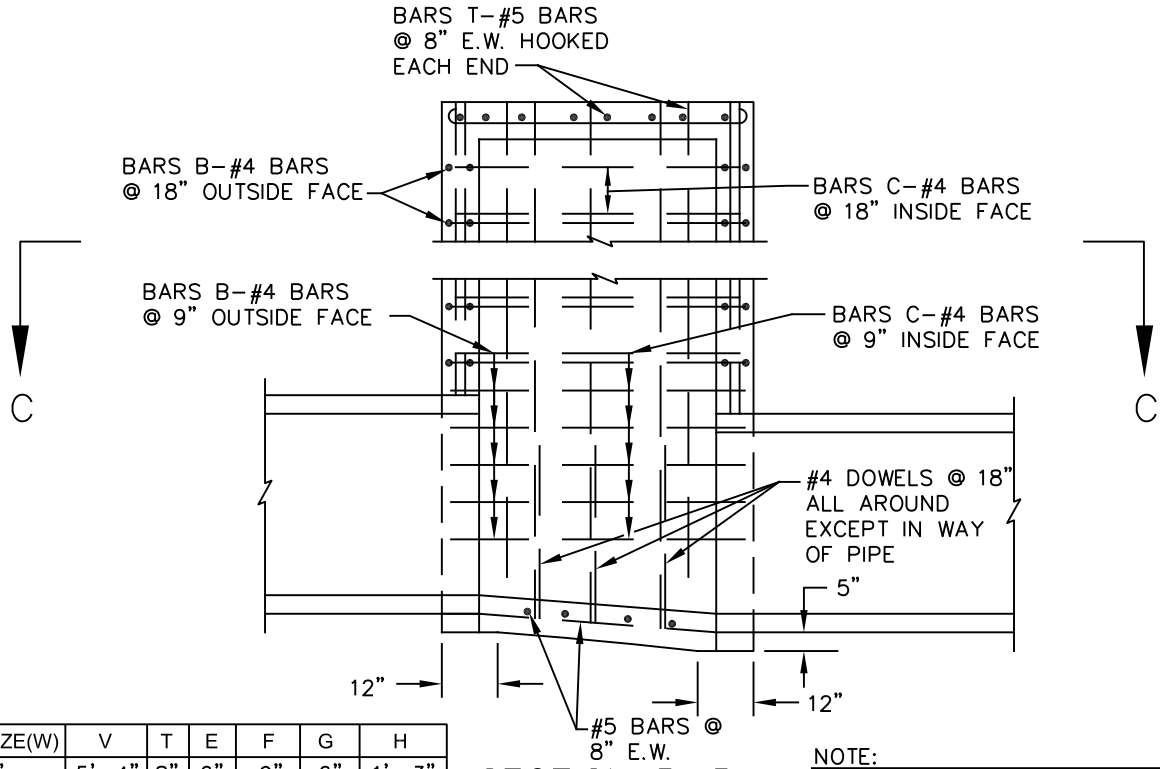

SECTION B-B

NO STD SCALE

NOTE:
SLOPE INVERT OF MANHOLE AS INDICATED ON PLAN-PROFILE SHEET.

M.H. SIZE(W)	V	T	E	F	G	H
4'	5'-4"	8"	6"	9"	6"	1'-3"
5'	6'-4"	8"	6"	12"	8"	1'-8"
6'	7'-6"	9"	9"	16"	10"	2'-2"

TABLE OF DIMENSIONS

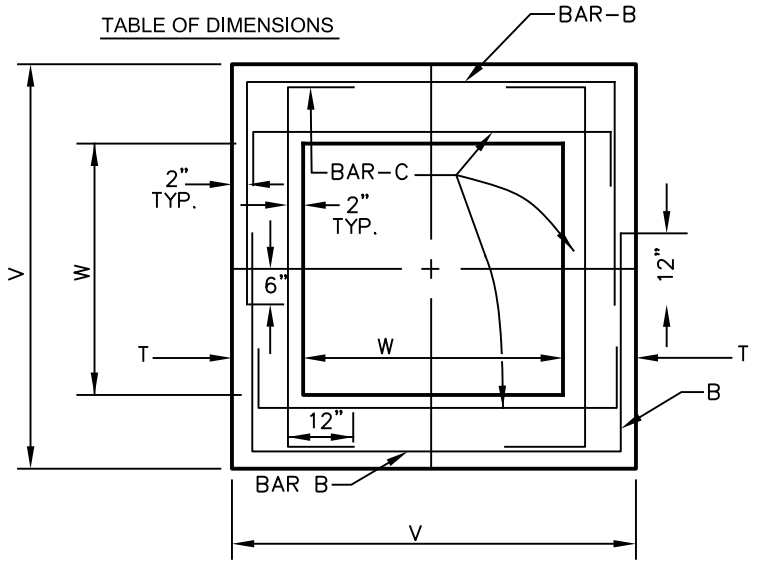

SECTION C-C

(VERTICAL BARS NOT SHOWN)
NO STD SCALE

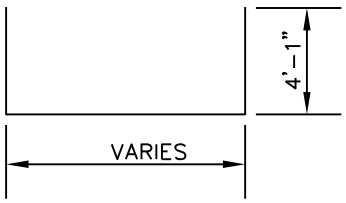

#4 BAR B

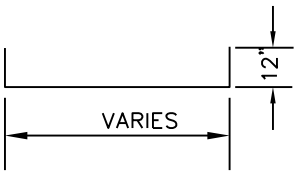

#4 BAR C

NOTES:

1. MATERIALS AND WORKMANSHIP SHALL CONFORM WITH THE REQUIREMENTS OF STANDARD SPECIFICATION FOR STANDARD MANHOLES.
2. LAYERS OF REINFORCING STEEL NEAREST THE INTERIOR AND EXTERIOR SURFACE SHALL HAVE A COVER OF 2" TO THE CENTER OF BARS, UNLESS OTHERWISE NOTED.
3. EXCAVATION FOR MANHOLE TO BE INCLUDED IN UNIT PRICE BID FOR MANHOLE.
4. FLOWABLE FILL IS REQUIRED FOR BACKFILL WHEN JUNCTION BOX IS UNDER PAVEMENT.

STANDARD 4',5',& 6' SQUARE STORM DRAIN JUNCTION BOX

CITY OF EULESS

COE-SDJB2 7/13

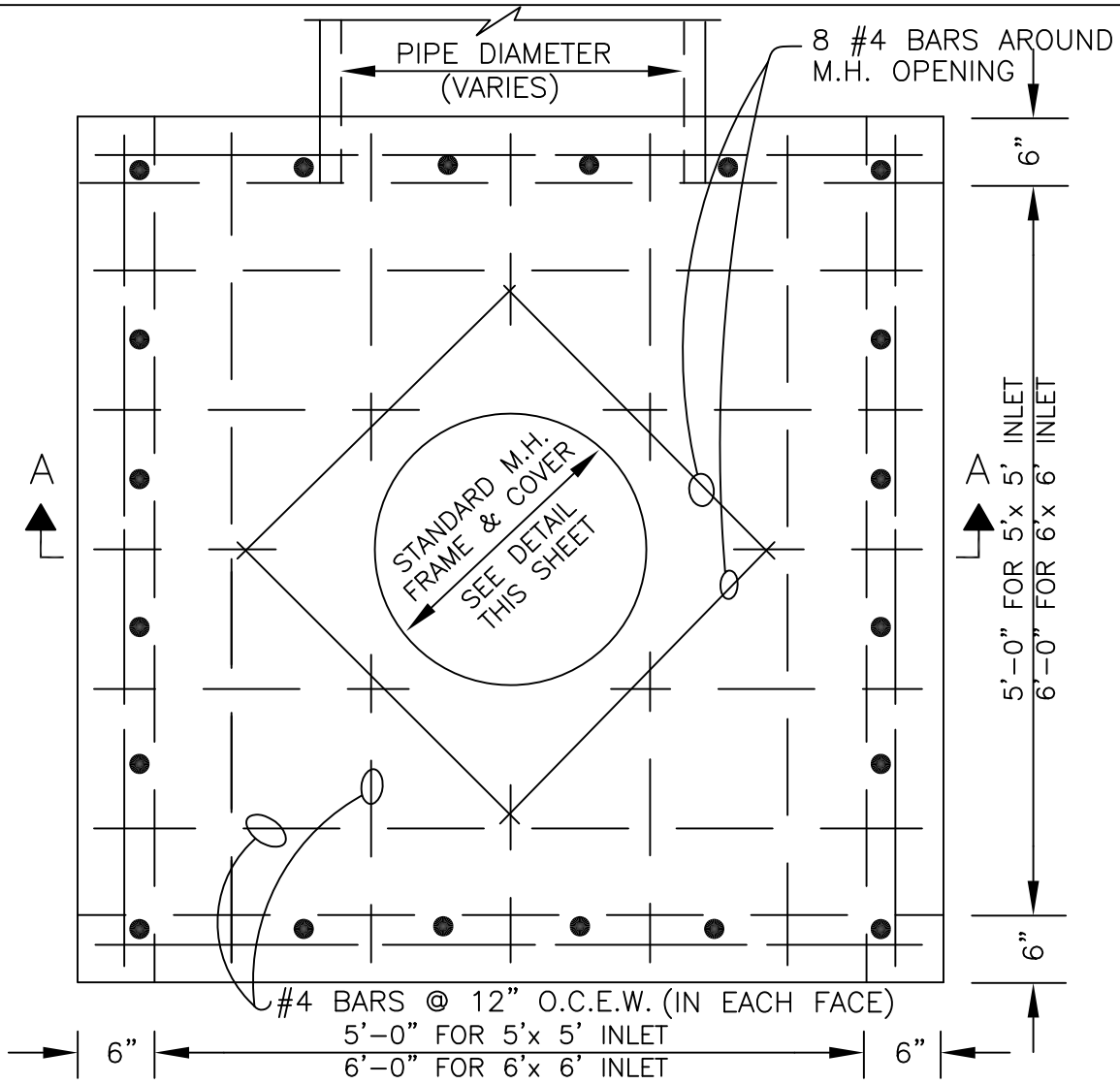

PLAN

–NO STD SCALE–

NOTE:

MANHOLE FRAME AND COVER # 103

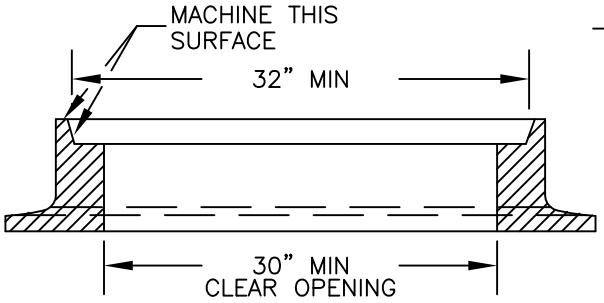

SECTION OF FRAME

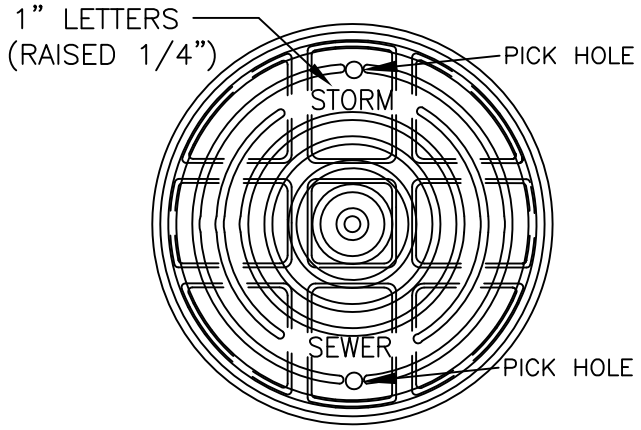

PLAN OF COVER

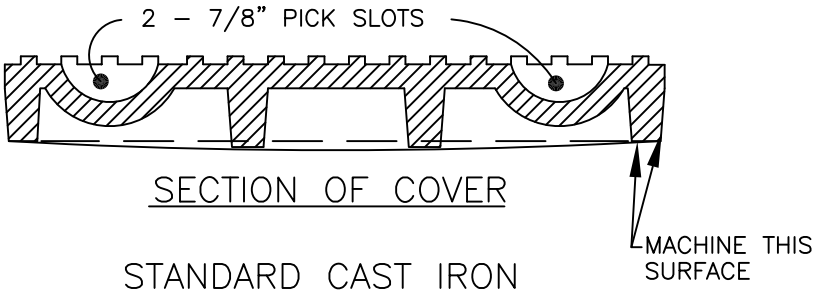

SECTION OF COVER

STANDARD CAST IRON
MANHOLE FRAME AND COVER

–NO STD SCALE–

TYPICAL "Y" INLET

CITY
OF
EULESS

COE–YI–1

8/10

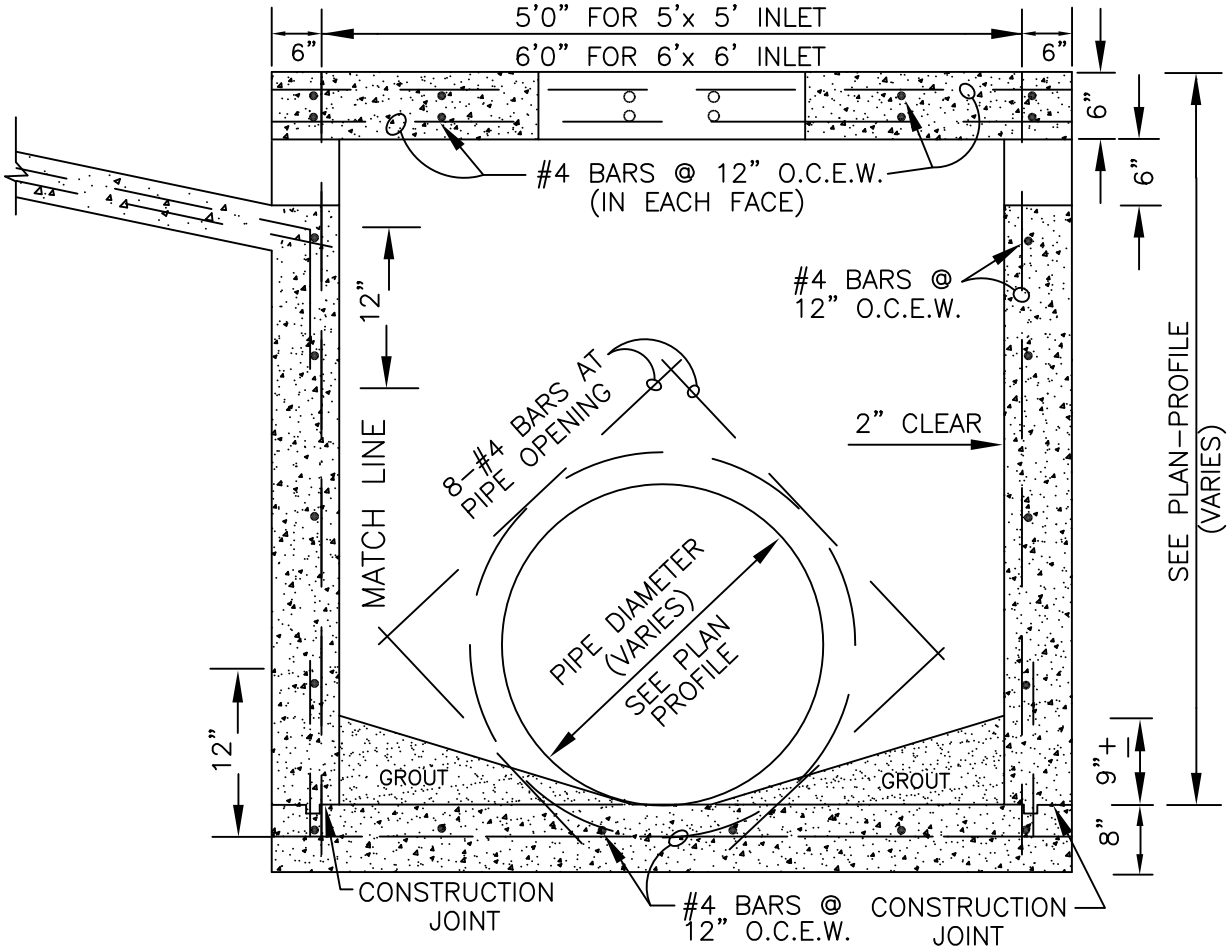

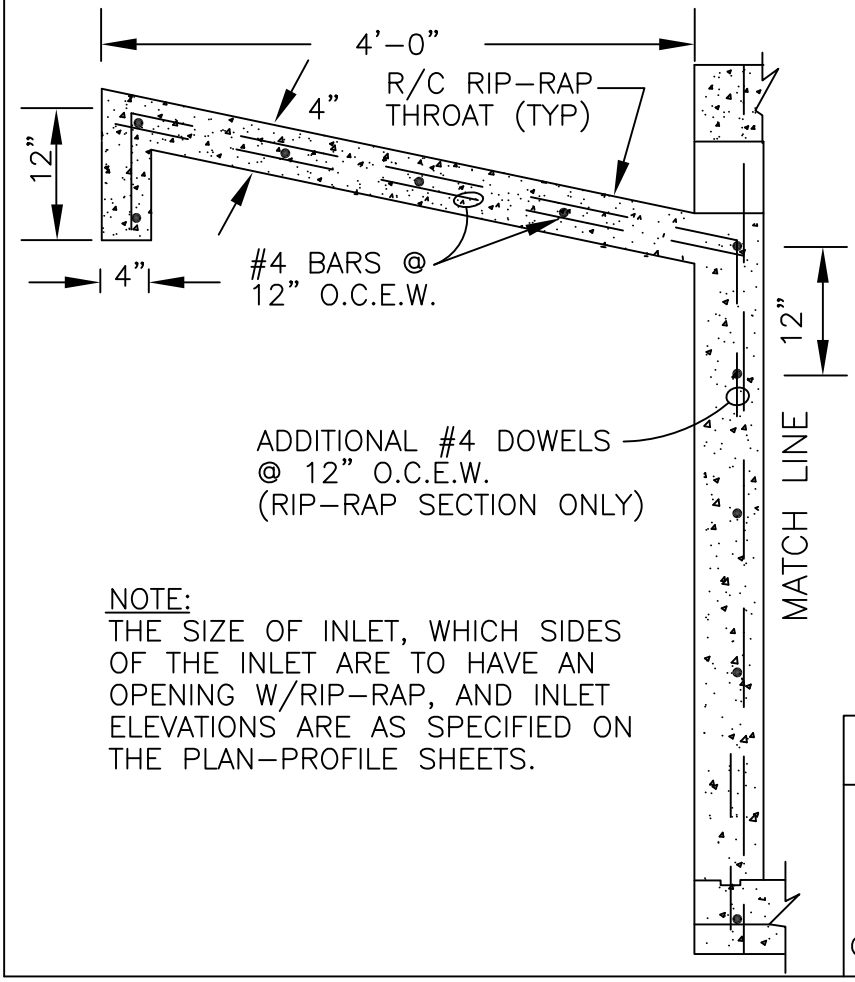

SECTION A-A

-NO STD SCALE-

NOTE:
THE SIZE OF INLET, WHICH SIDES OF THE INLET ARE TO HAVE AN OPENING W/RIP-RAP, AND INLET ELEVATIONS ARE AS SPECIFIED ON THE PLAN-PROFILE SHEETS.

TYPICAL "Y" INLET

CITY
OF
EULESS

COE-YI-2

8/10

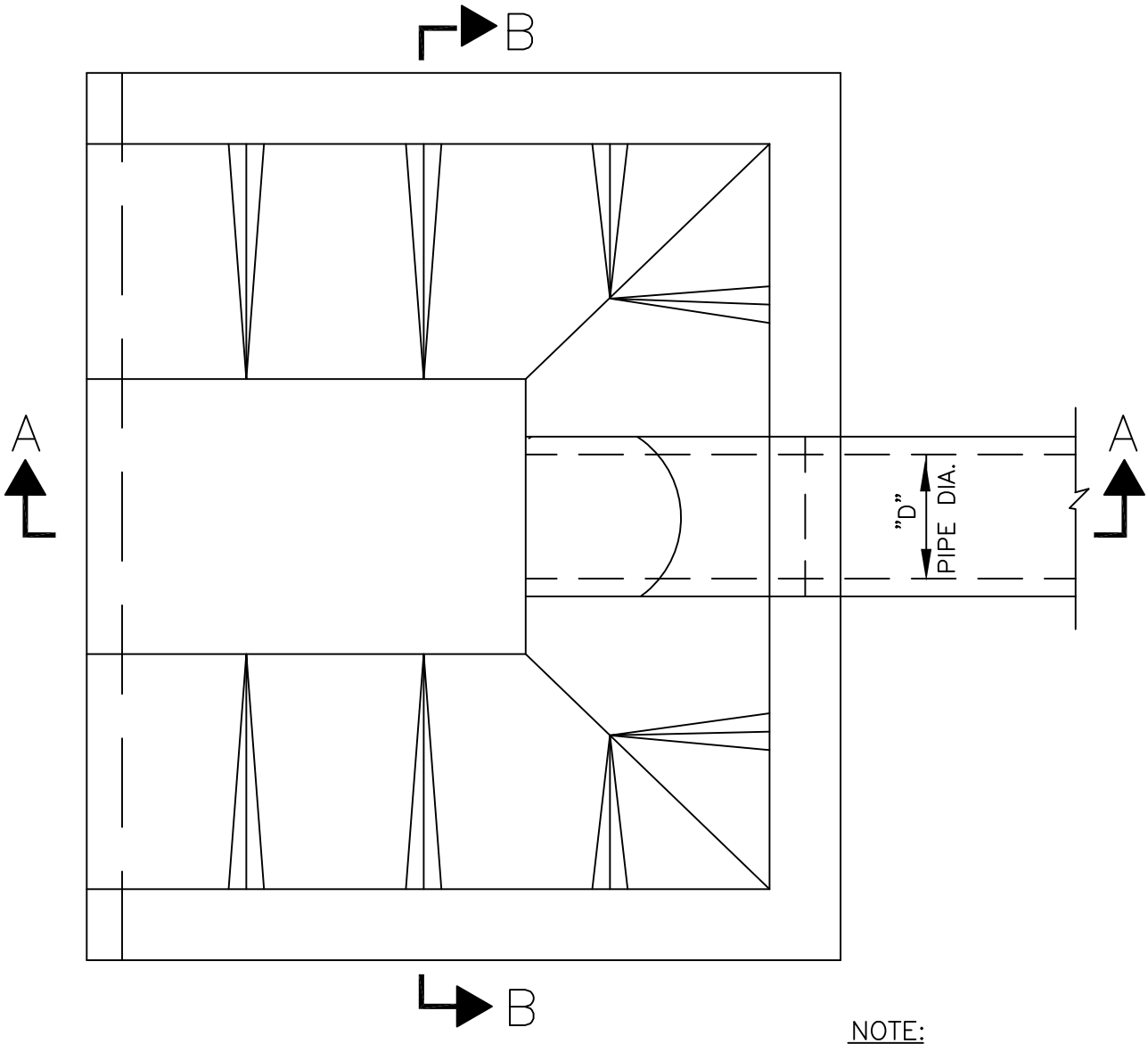

PLAN VIEW

NOTE:
SEE SHEET 2 OF 2
FOR SECTIONS "A–A"
AND "B–B"

CONCRETE APRON WITH SLOPING HEADWALL

–NO STD SCALE–

CONCRETE APRON	
CITY OF EULESS	
COE–CA–1	2/99

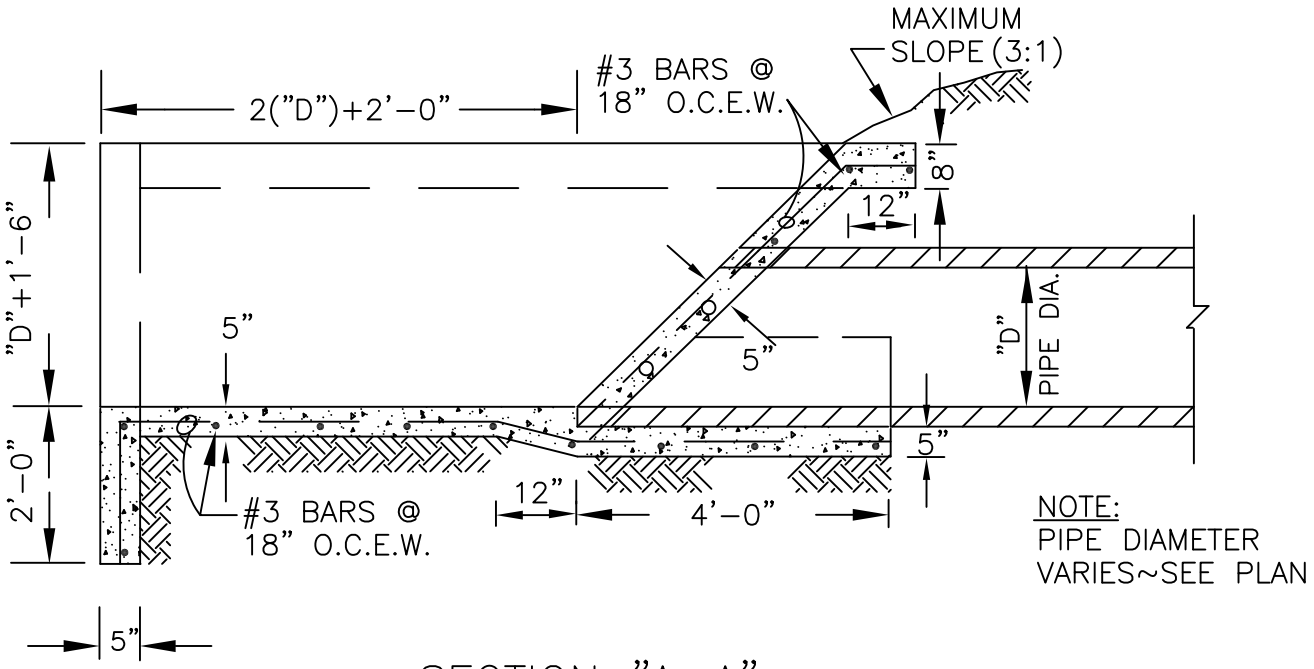

SECTION "A-A"

-NO STD SCALE-

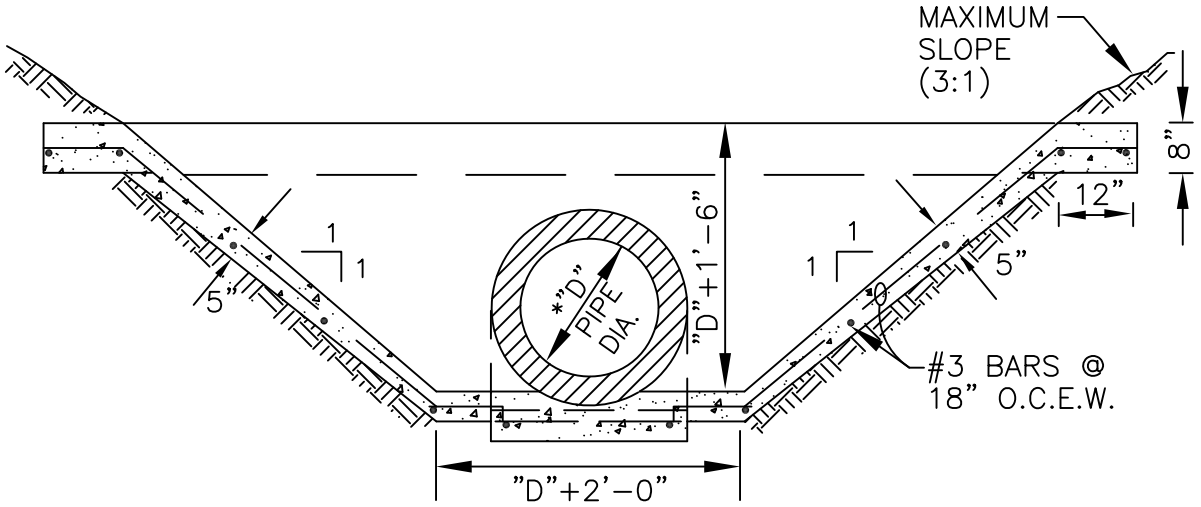

SECTION "B-B"

-NO STD SCALE-

CONCRETE APRON WITH SLOPING HEADWALL	
CITY OF EULESS	
COE-CA-2	2/99

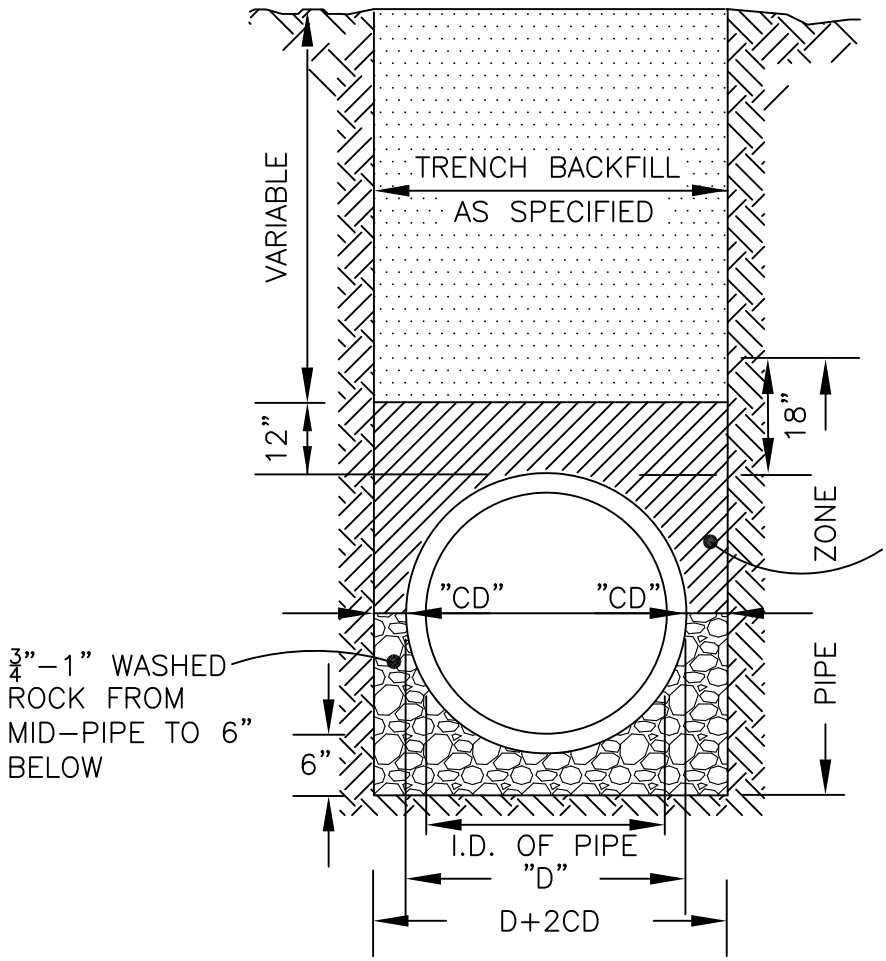

NOTE:
TRENCH WALLS WITHIN THE PIPE ZONE AREA SHALL BE MAINTAINED VERTICAL. THE TRENCH WALLS ABOVE THE PIPE ZONE AREA MAY BE EITHER VERTICAL OR SLOPED DEPENDENT ON EASEMENT WIDTH AND CRITERIA SET FORTH IN THE "TRENCH AND/ OR EXCAVATION SAFETY PLAN." ALL CONSTRUCTION SHALL BE IN ACCORDANCE WITH THE APPLICABLE FEDERAL OSHA STANDARDS.

NOTE:
THE CLEAR DISTANCE "CD" BETWEEN THE PIPE WALL AND THE TRENCH WALL SHALL BE 9" FOR PIPE DIAMETER METERS UP TO AND INCLUDING 30". THE "CD" SHALL BE A MIN– IMUM OF 12" FOR PIPE W/A DIAMETER OF 33" OR LARGER, OR AS DIRECTED BY THE CITY ENGINEER

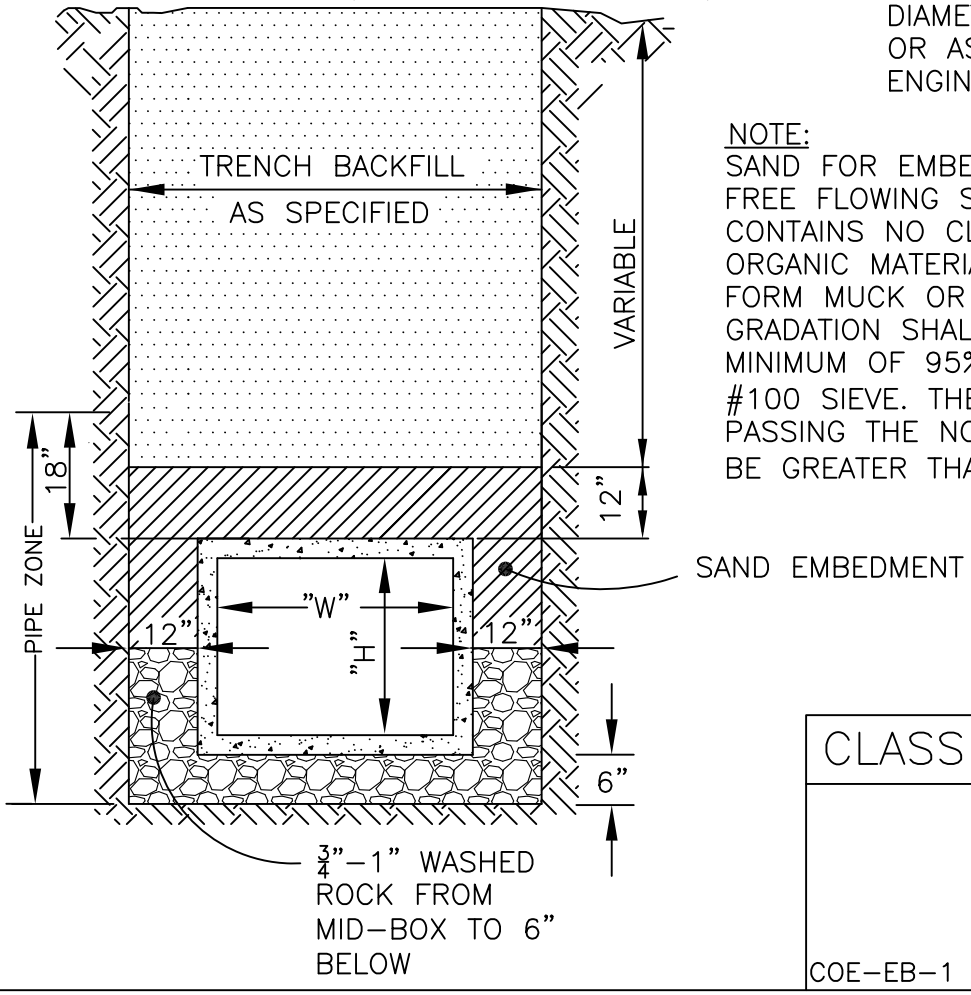

NOTE:
SAND FOR EMBEDMENT SHALL BE A FREE FLOWING SANDY MATERIAL WHICH CONTAINS NO CLAY, IS FREE FROM ORGANIC MATERIAL AND DOES NOT FORM MUCK OR MUD WHEN WET. THE GRADATION SHALL BE SUCH THAT A MINIMUM OF 95% IS RETAINED ON A #100 SIEVE. THE P.I. OF THE SOIL PASSING THE NO. 40 SIEVE SHALL NOT BE GREATER THAN FIVE (5).

CLASS "B" EMBEDMENT

CITY OF EULESS

COE–EB–1 9/08

IV

STREET PAVING DETAILS

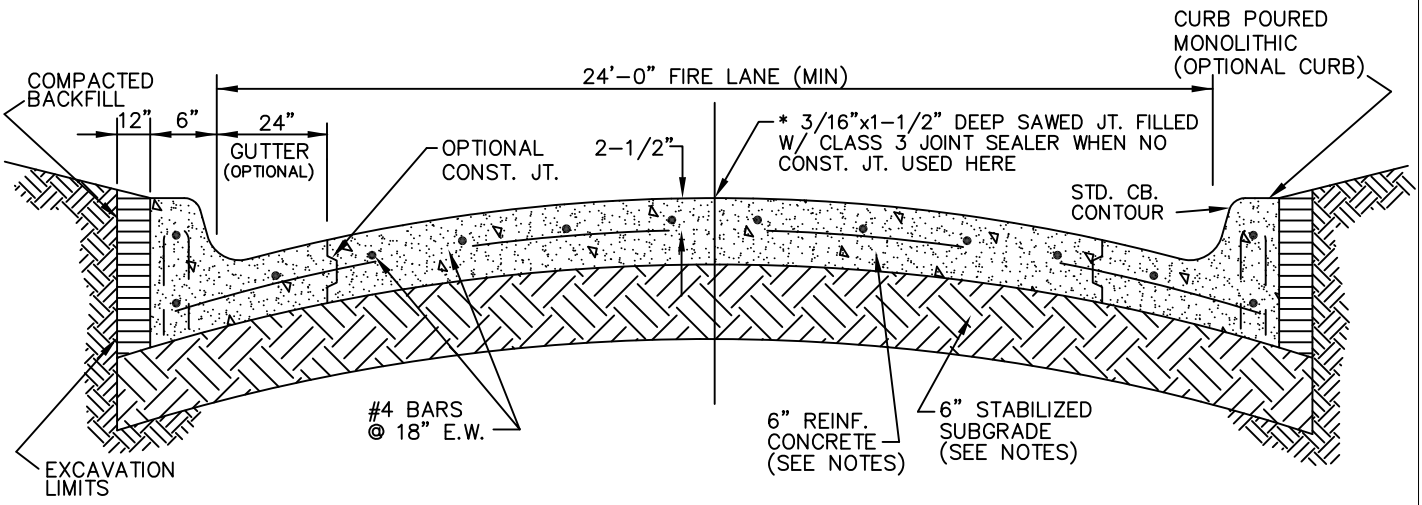

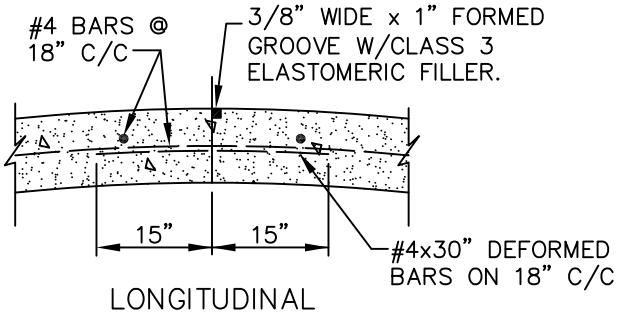

LONGITUDINAL CONST. JT. DETAIL

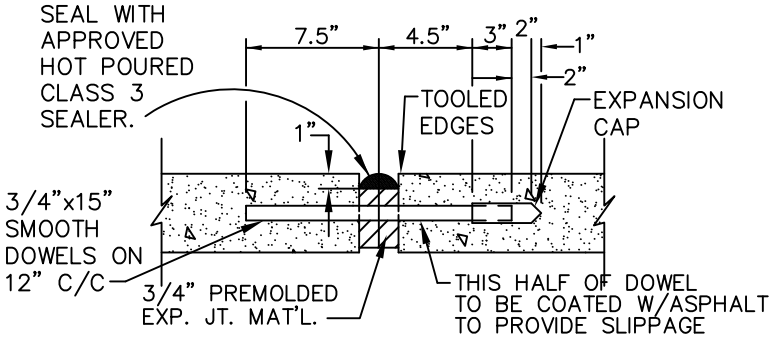

EXPANSION JT. DETAIL

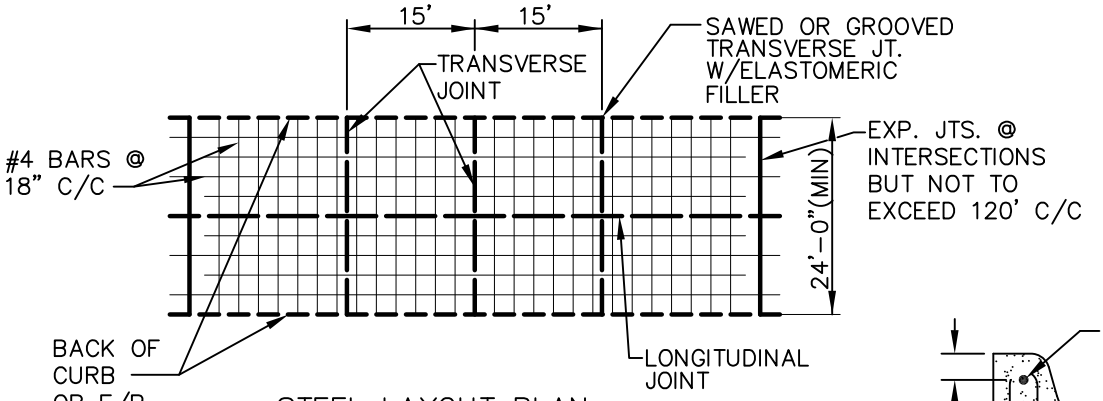

STEEL LAYOUT PLAN

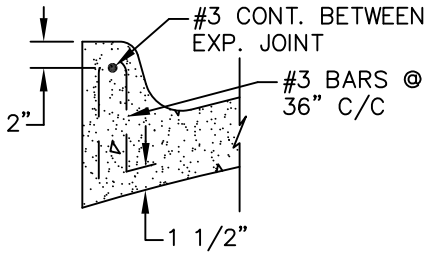

CURB REINFORCING

NOTES:

CONCRETE PAVEMENT SHALL HAVE A MINIMUM COMPRESSIVE STRENGTH OF 4200 PSI AT 28 DAYS.

SECTION MAY BE CROWNED (PARABOLIC OR STRAIGHT); INVERTED; OR HAVE A STRAIGHT CROSS SLOPE. MAXIMUM CROSS SLOPE IS 6%. MAXIMUM LONGITUDINAL GRADE IS 6%.

MIN. OF 30 LBS/S.Y. LIME OR CEMENT REQUIRED FOR SUB- GRADE STABILIZATION. COMPACTION TO 95% STANDARD STANDARD PROCTOR DENSITY, AND HAVE A MOISTURE CONTENT FROM 0% TO +4% ABOVE OPTIMUM MOISTURE.

EMERGENCY ACCESS AND FIRE LANE EASEMENT TYPICAL PAVEMENT SECTION

CITY OF EULESS

COE-FL 11/04

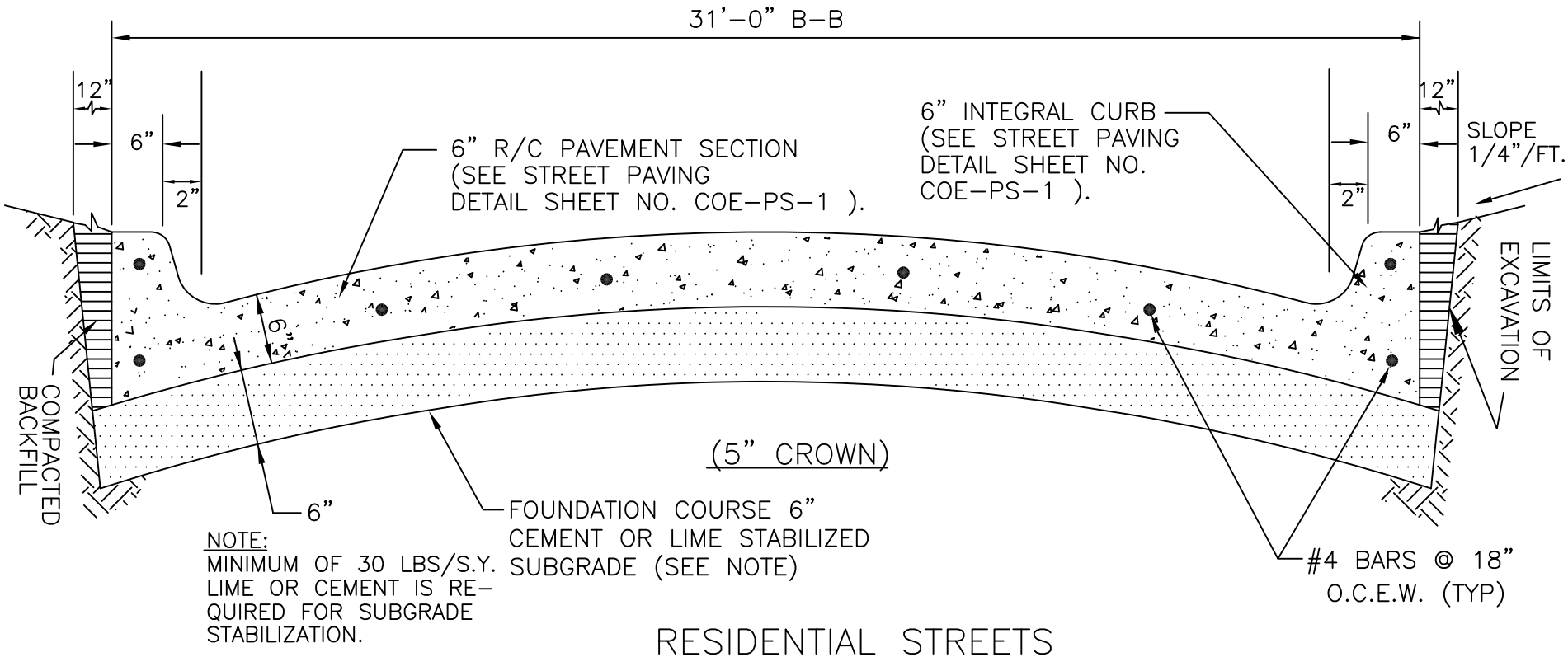

NOTE:
MINIMUM OF 30 LBS/S.Y. LIME OR CEMENT IS REQUIRED FOR SUBGRADE STABILIZATION.

RESIDENTIAL STREETS
REINFORCED CONCRETE PAVEMENT

-NO SCALE-

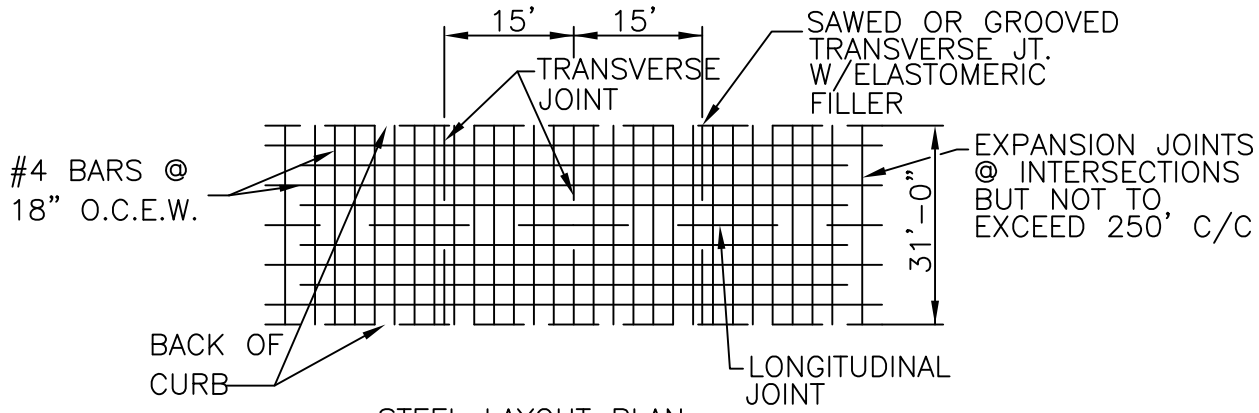

STEEL LAYOUT PLAN

STREET PAVING DETAILS

CITY OF EULESS

AMENDED TRANSV. JOINT LOC. 5/01
COE-RC-1 1/01

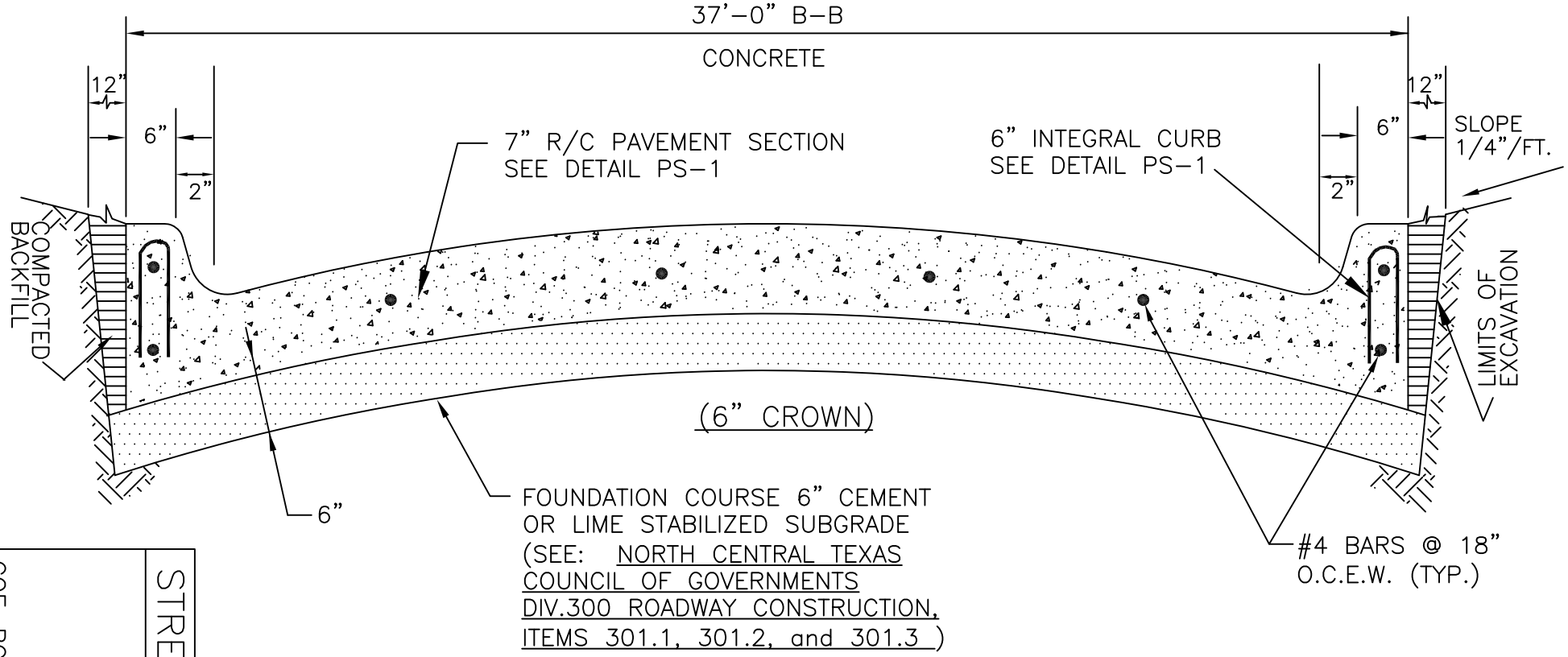

MINOR COLLECTOR STREET

REINFORCED CONCRETE PAVEMENT

-NO SCALE-

STREET PAVING DETAILS

CITY OF EULESS

COE-RCP1

2/10

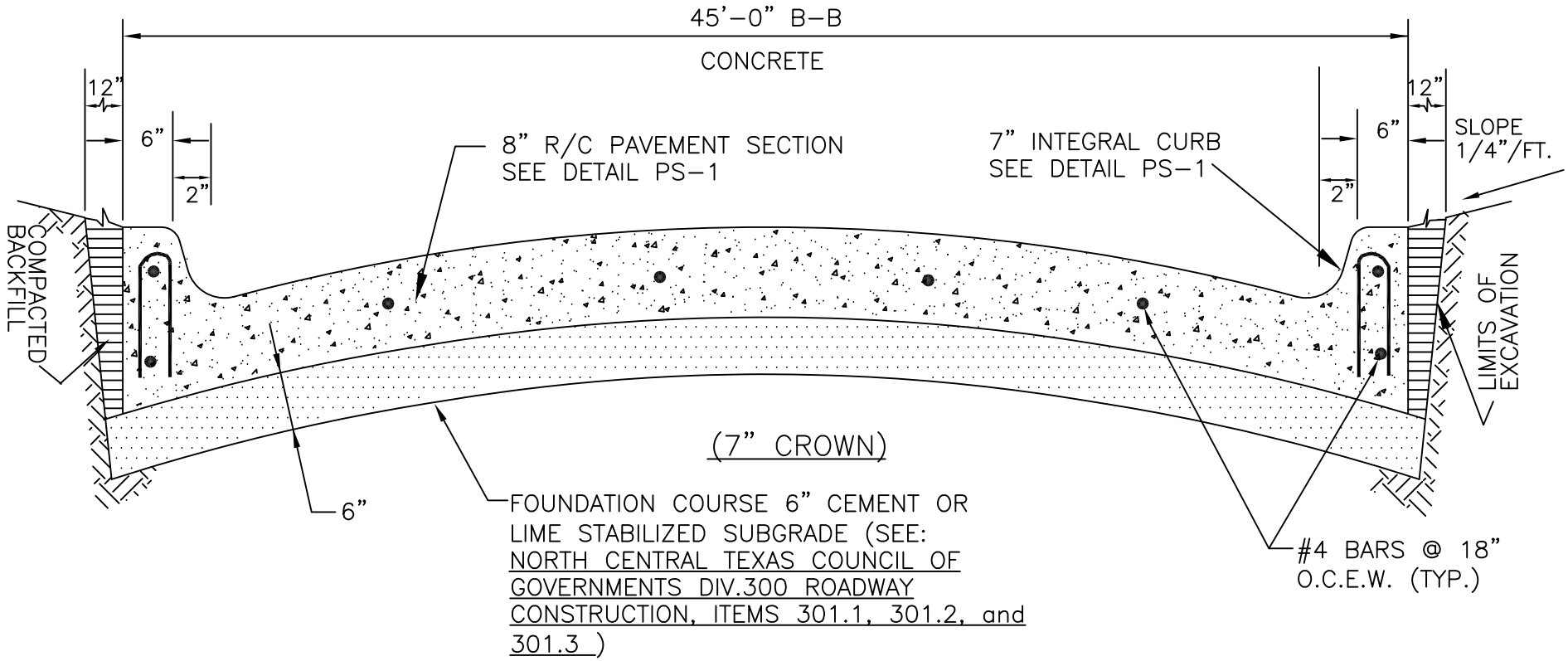

MAJOR THOROUGHFARE

REINFORCED CONCRETE PAVEMENT

-NO STD SCALE-

STREET PAVING DETAILS

CITY
OF
EULESS

COE-RCP 2 2/10

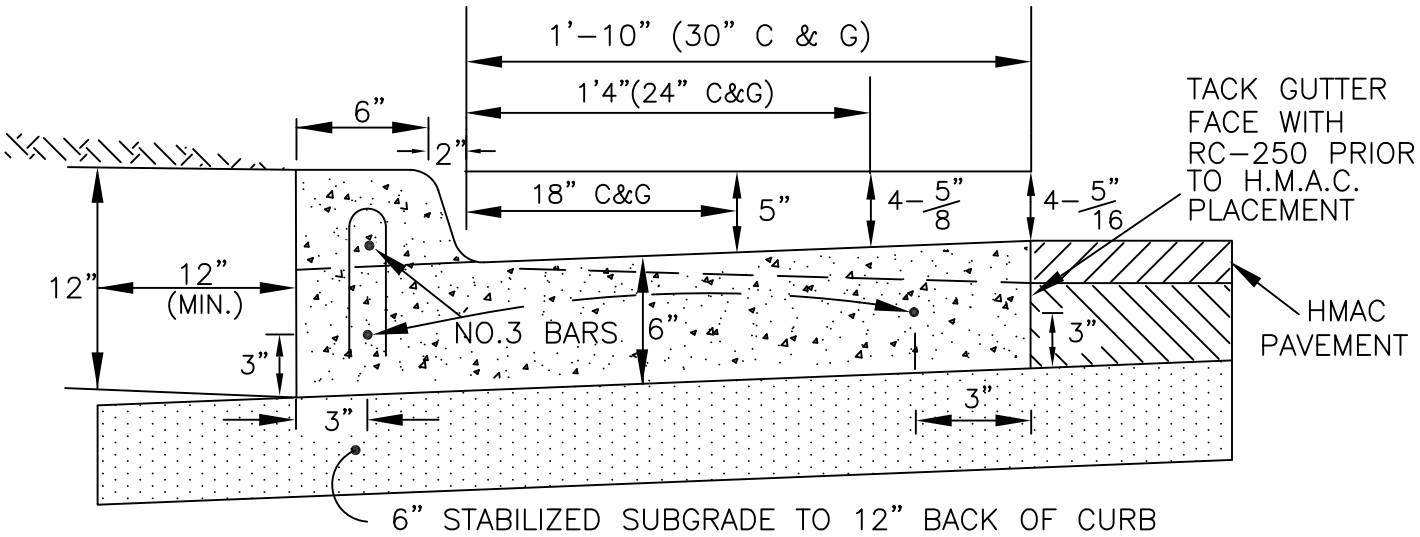

TYPICAL 6" CURB & GUTTER SECTION

(EXISTING STREETS ONLY)
NO STD SCALE

1. IN THOSE AREAS SHOWN ON THE PLAN WHERE THE DRAINAGE PATTERN IS AWAY FROM THE CURB, THE GUTTER SECTION SHALL BE SLOPED AWAY FROM THE CURB AT A GRADE TO MATCH THE SLOPE OF THE PROPOSED PAVEMENT SECTION.
2. PREFORMED EXPANSION JOINTS SHALL BE INSTALLED AT 120 FEET INTERVALS (MAXIMUM). REINFORCING STEEL SHALL EXTEND THROUGH THE JOINTS.
3. MARKED JOINTS OR DUMMY JOINTS SHALL BE SPACED 5'-0" ON CENTER.
4. CONCRETE SHALL BE (4200 PSI @ 28 DAYS).
5. TYPE 2 WHITE PIGMENTED CURING COMPOUND REQUIRED.
6. FOR CONCRETE PAVEMENT WITH INTEGRAL CURB, INSTALL NO. 3 HAIRPIN BARS AT 24" O.C. TO SUPPORT CONTINUOUS NO. 3 LONGITUDINAL BAR.

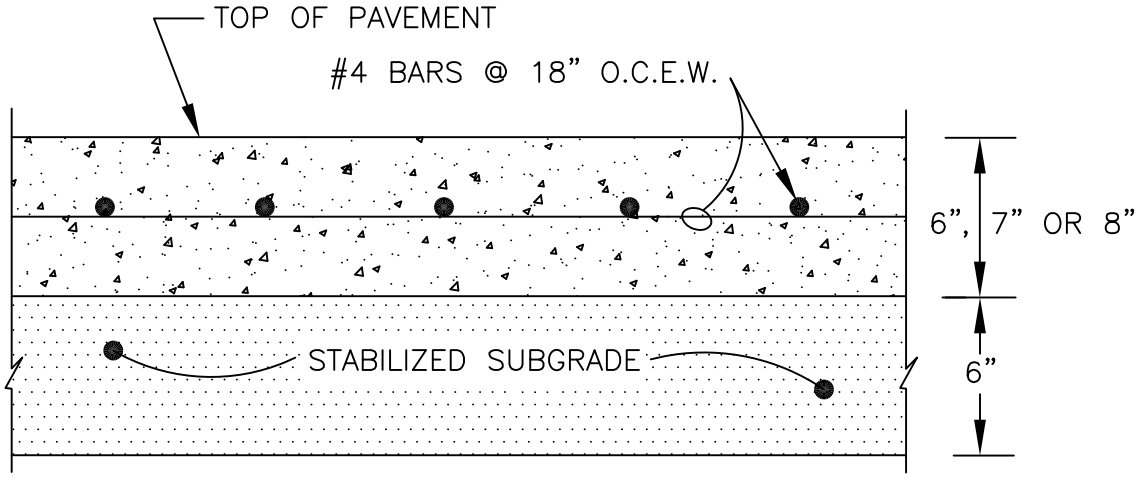

TYPICAL CONCRETE PAVEMENT SECTION

-NO STD SCALE-

NOTES:
1. SEE JOINT DETAILS ON SHEET JT-1.
2. PRIOR TO START OF CONSTRUCTION ON THE CONCRETE PAVEMENT, THE CONTRACTOR SHALL FURNISH TO THE ENGINEER A DETAILED JOINT LAYOUT PLAN FOR APPROVAL.
3. MINIMAL PAVEMENT SECTIONS ARE USED IN THESE DETAILS. THE ENGINEER SHALL BE RESPONSIBLE FOR THE DESIGN OF AN ADEQUATE PAVEMENT SECTION.

STREET PAVING DETAILS

CITY OF EULESS

COE-PS-1 1/01

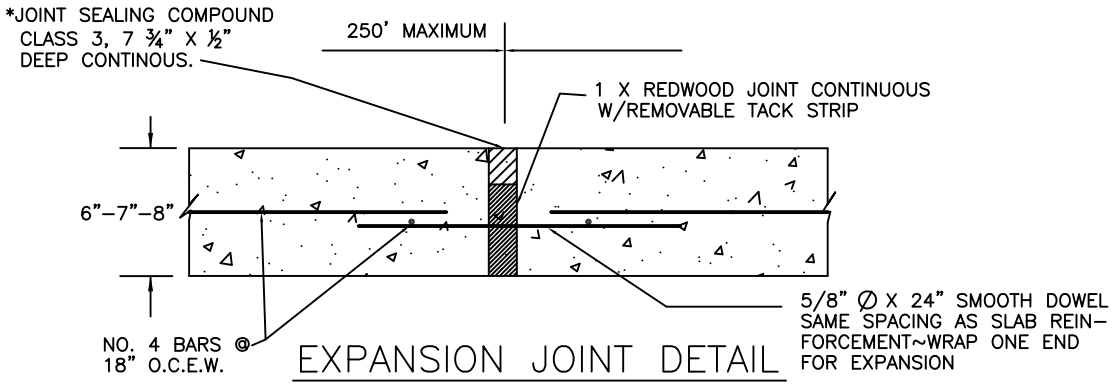

EXPANSION JOINT DETAIL

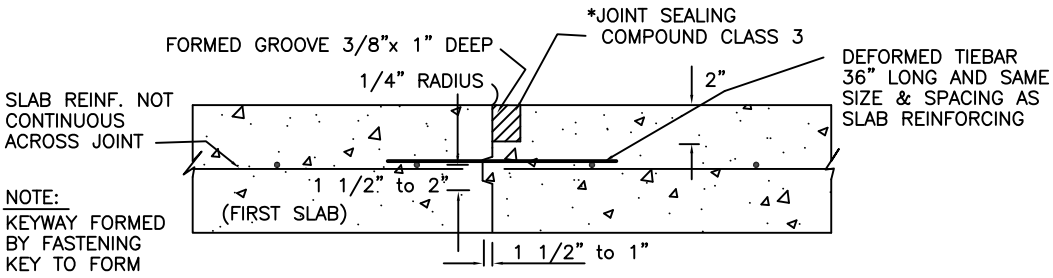

LONGITUDINAL JOINT

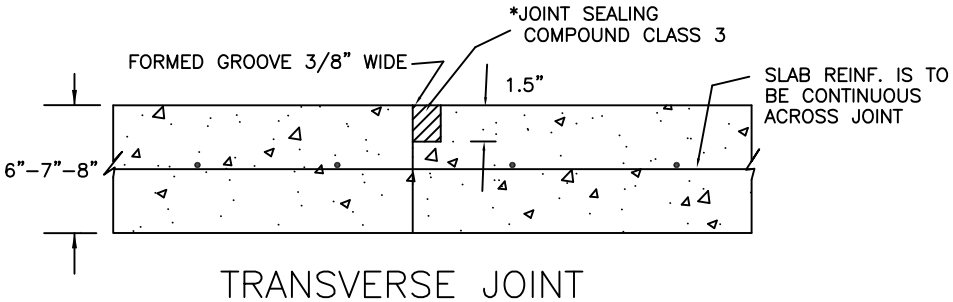

TRANSVERSE JOINT

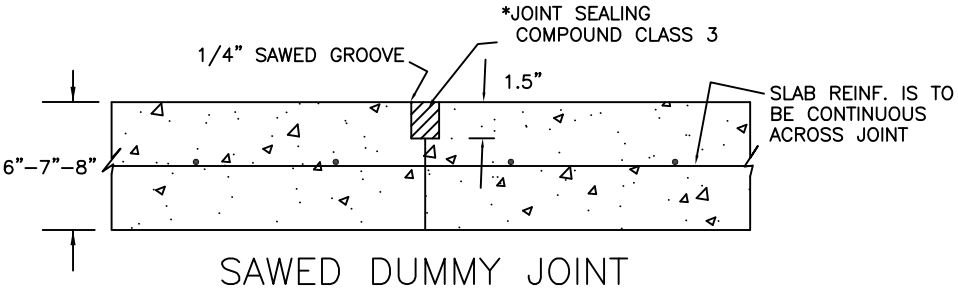

SAWED DUMMY JOINT

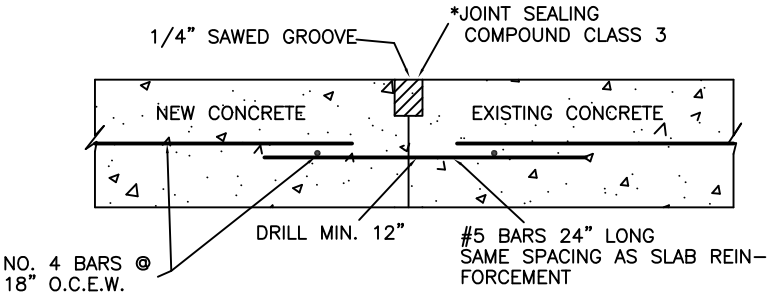

MISC. CONSTRUCTION JOINT DETAIL

* See TxDot Item 433.2.

STREET PAVING DETAILS

CITY OF EULESS

ADDED MISC. JOINT	5/02
AMENDED EXPAN. JOINT LOC.	5/01
COE–JT–1	1/01

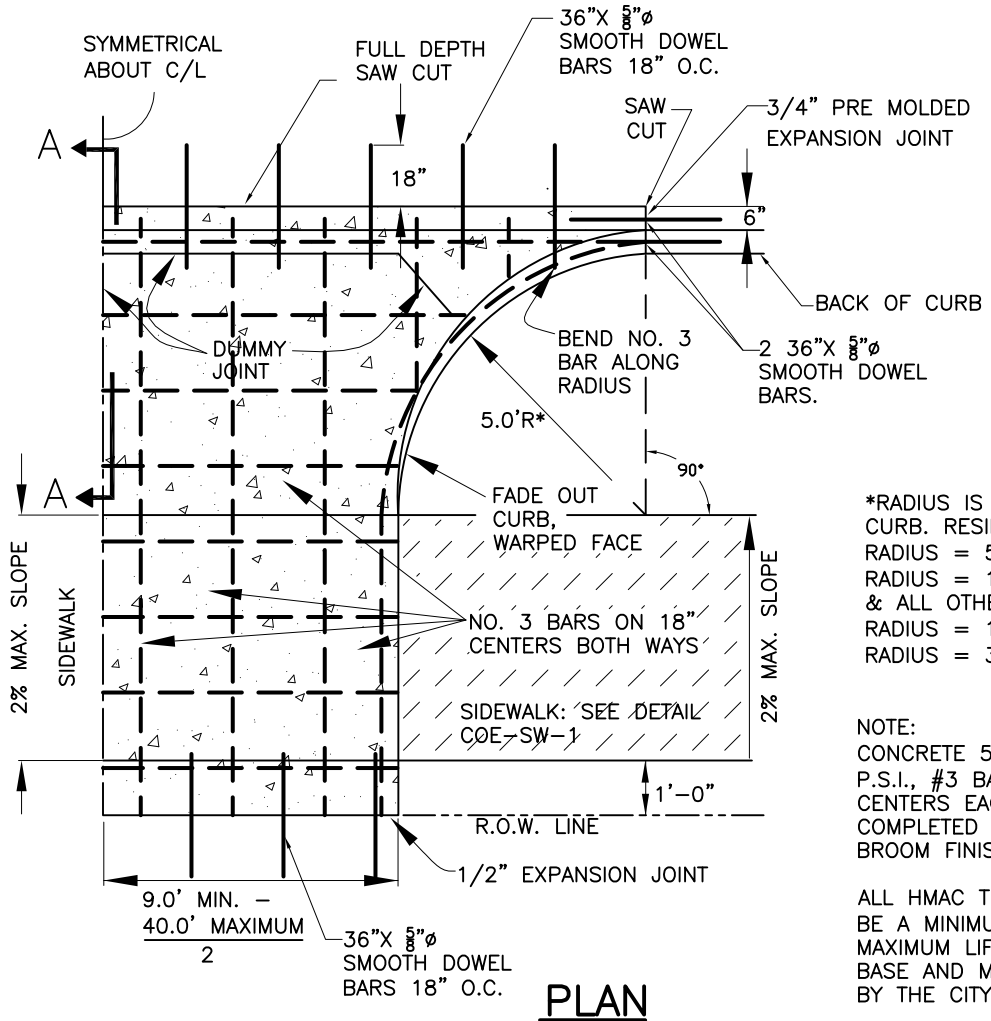

PLAN

*RADIUS IS TO BACK OF CURB. RESIDENTIAL: MINIMUM RADIUS = 5.0' MAXIMUM RADIUS = 15.0' COMMERCIAL & ALL OTHERS: MINIMUM RADIUS = 15.0' MAXIMUM RADIUS = 30.0'

NOTE:
CONCRETE 5" THICK, 3000 P.S.I., #3 BARS @ 18" CENTERS EACH WAY. COMPLETED WITH A LIGHT BROOM FINISH.

ALL HMAC TRANSITIONS SHALL BE A MINIMUM OF 30", 2" MAXIMUM LIFTS, HAVE STABLE BASE AND MUST BE APPROVED BY THE CITY INSPECTOR.

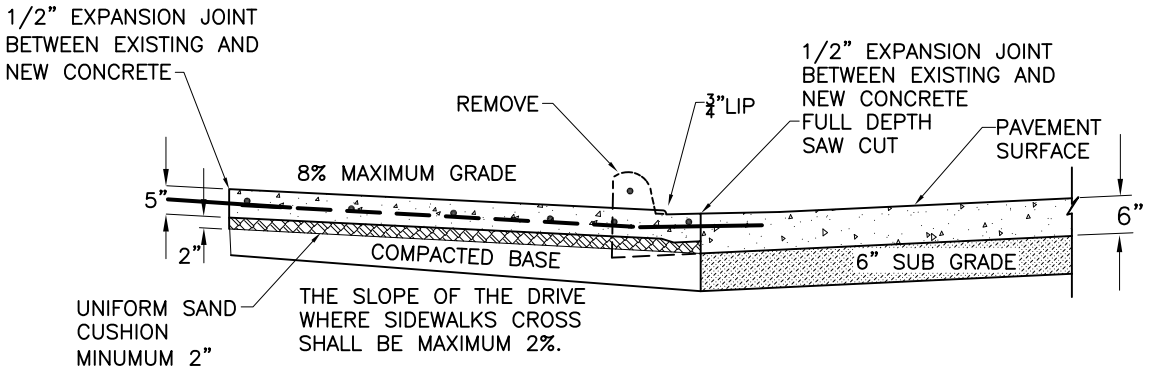

SECTION A–A

TYPICAL DRIVE APPROACH

STREET PAVING DETAILS	
CITY OF EULESS	
COE–SP–1	1/10

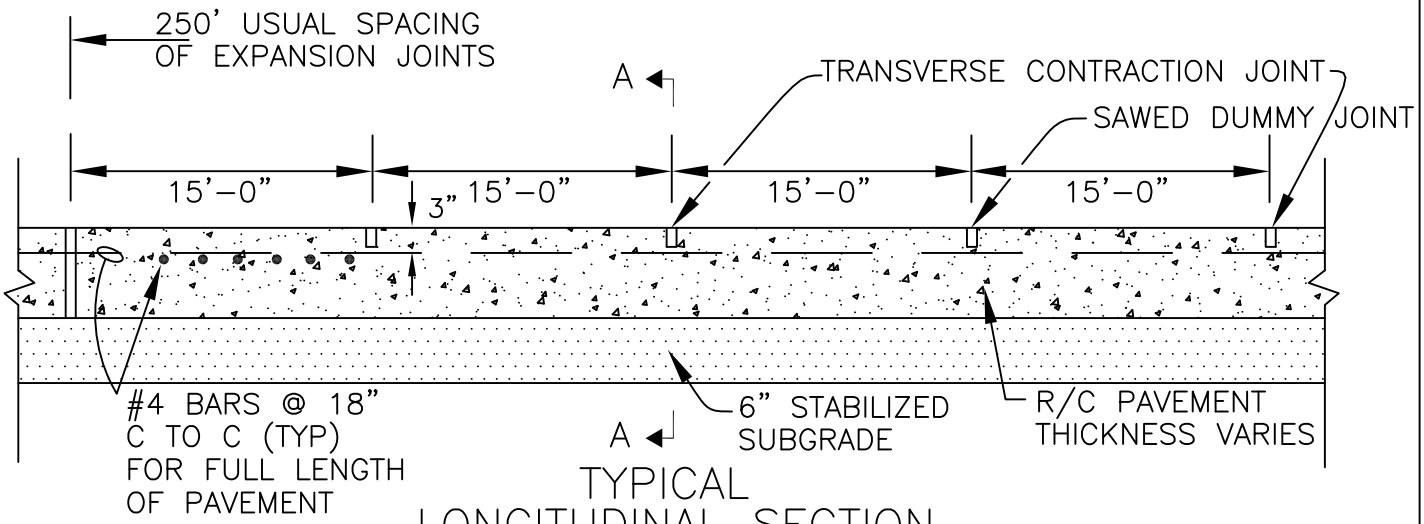

TYPICAL
LONGITUDINAL SECTION

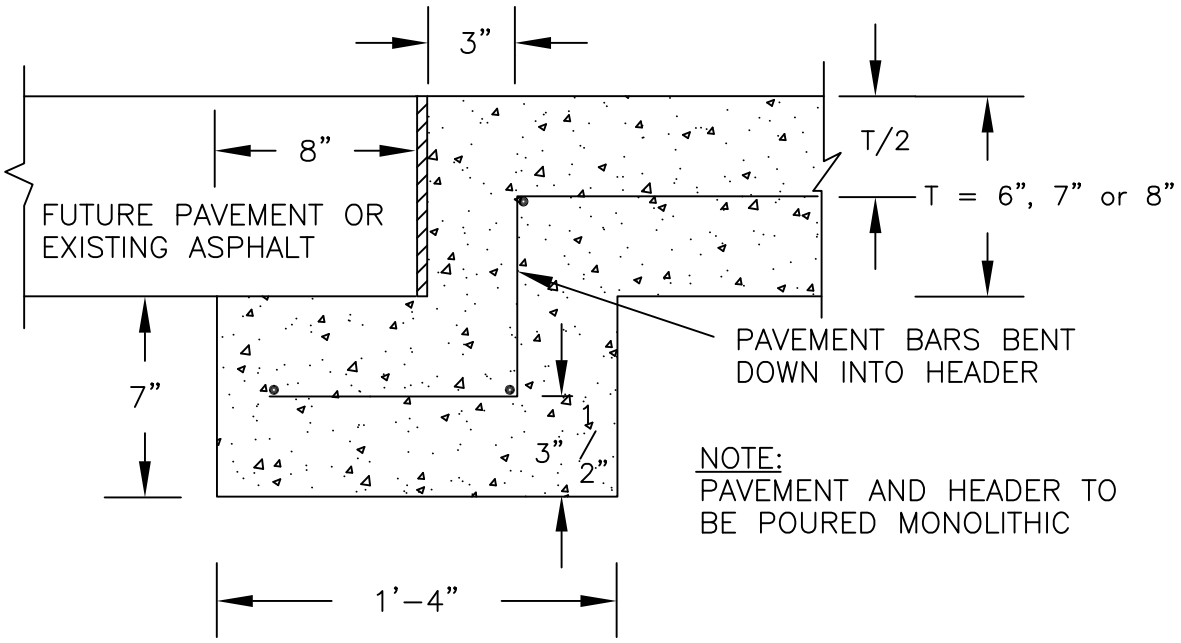

NOTE:
PAVEMENT AND HEADER TO
BE POURED MONOLITHIC

SECTION A–A

PAVEMENT HEADER DETAIL

–NO SCALE–

STREET PAVING DETAILS

CITY
OF
EULESS

AMENDED BAR LOC. (T/2)	6/01
AMENDED EXPAN. JOINT LOC.	5/01
COE–SP–2	1/01

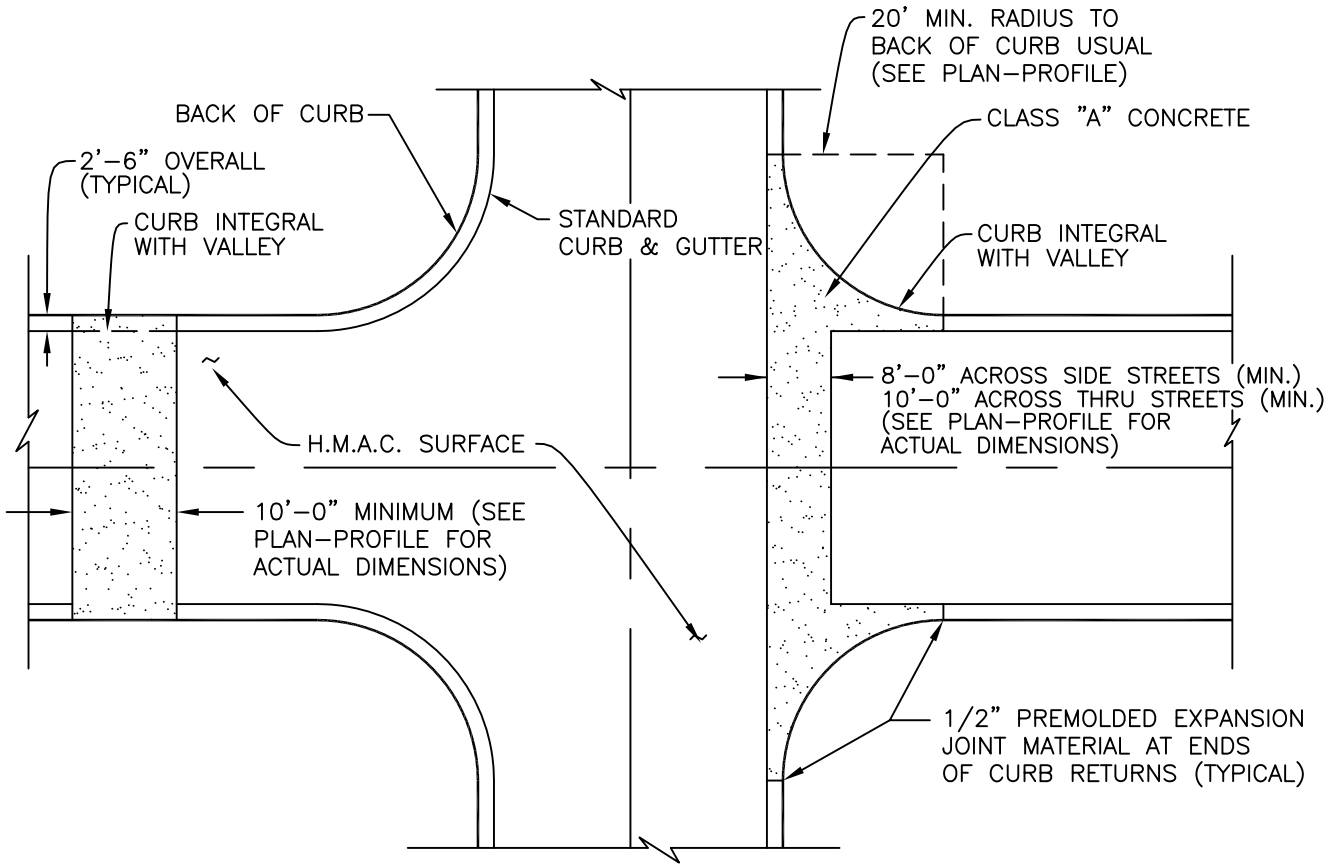

PLAN

-NO SCALE-

CROWN TRANSITION FOR CONCRETE VALLEY			
DISTANCE FROM	CROWN		
C/L OF VALLEY	6"	7"	8"
0'	0.000'	0.000'	0.000'
5'	0.167'	0.167'	0.167'
10'	0.290'	0.290'	0.290'
20'	0.445'	0.455'	0.465'
30'	0.500'	0.540'	0.580'
40'	0.500'	0.583'	0.635'
50'	0.500'	0.583'	0.667'

NOTE:

1. CONCRETE SHALL HAVE 5 SACKS OF CEMENT/C.Y., MAXIMUM SLUMP OF 5 INCHES, AND A 4200 PSI COMPRESSIVE STRENGTH AT 28 DAYS.
2. PAYMENT FOR CONCRETE VALLEY WILL BE BY THE S.F. INTEGRAL CURB AND GUTTER WILL BE PAID FOR BY THE L.F. OF CURB AND GUTTER OF SIZE AS SHOWN.

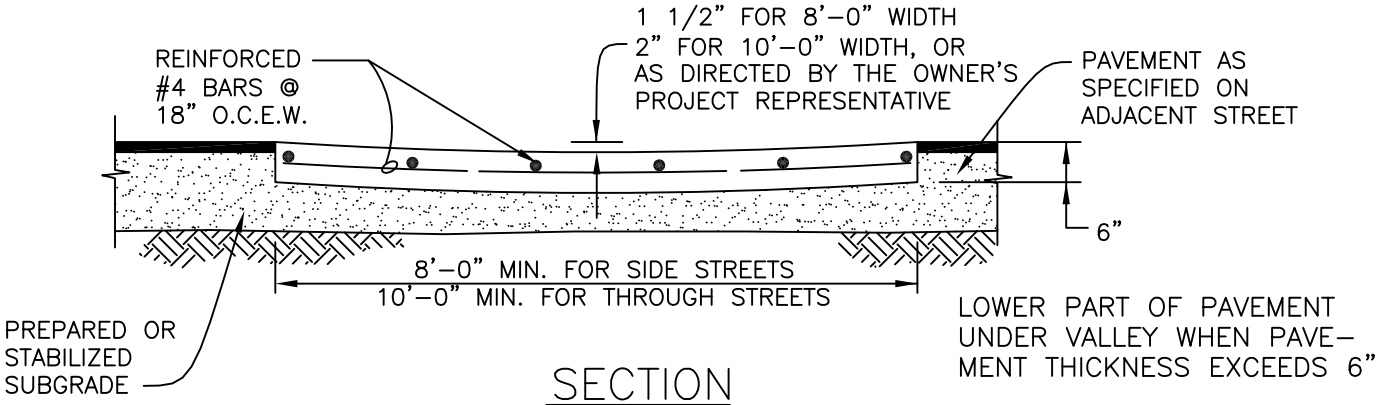

SECTION

-NO SCALE-

CONCRETE VALLEY GUTTER

CITY OF EULESS

COE-VG-4 1/01

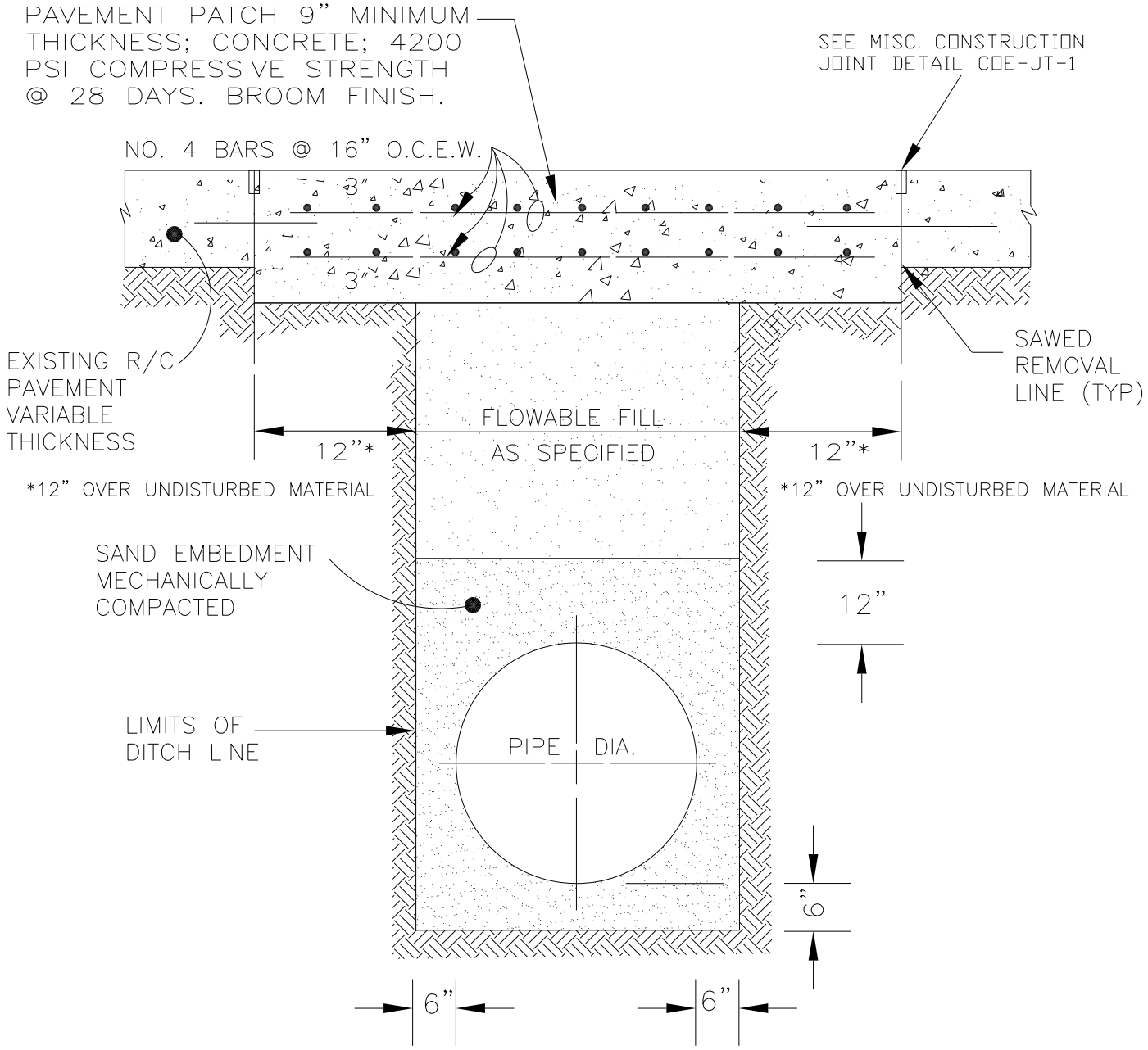

PAVEMENT PATCH TYPE "A"

-NO SCALE-

FLOWABLE FILL DESIGN VALUE

MIX NO.	9	
USE:	FLOWABLE FILL	
COMP STRENGTH:	200 PSI @ 28 DAYS	SACK: 2.13
SLUMP:	8" +/- 1"	
ENTRAINED AIR:	20% +/- 1.5%	Typical air content for flowable fill in accordance with ASTM
TEMP RANGE:	50-90 °F	

1 CUBIC YARD MIX PROPORTIONS

COMPONENT	ASTM	TYPE	WEIGHT(LBS)	SPEC. GRAVITY	VOLUME (CF)
CEMENT	C150	I/II	50	3.15	0.25
FLY ASH	C618		150	2.7	0.89
COARSE AGGREGATE		none	0	0	0
FINE AGGREGATE BLEND	C33		2428	2.64	14.85
WATER		42gal	350	1	5.61
DESIGNED AIR					5.4
THEO. PLASTIC UNIT WT: 110.3 pcf			THEO. YIELD: 27 cf/cy		
WATER/CEMENTITIOUS MATERIALS RATIO: 1.75					
ADMINXTURES	ASTM	TYPE		Dosage/yard	oz/cwt
AIR ENTRAINING AGENT	C260	AEA		5 oz/cy	2.5
WATER REDUCER	C494			N/A	N/A
RETARDER	C494				
FIBERS					

TYPE "A" PAVEMENT PATCH

CITY OF EULESS

COE-PP-1 7/15

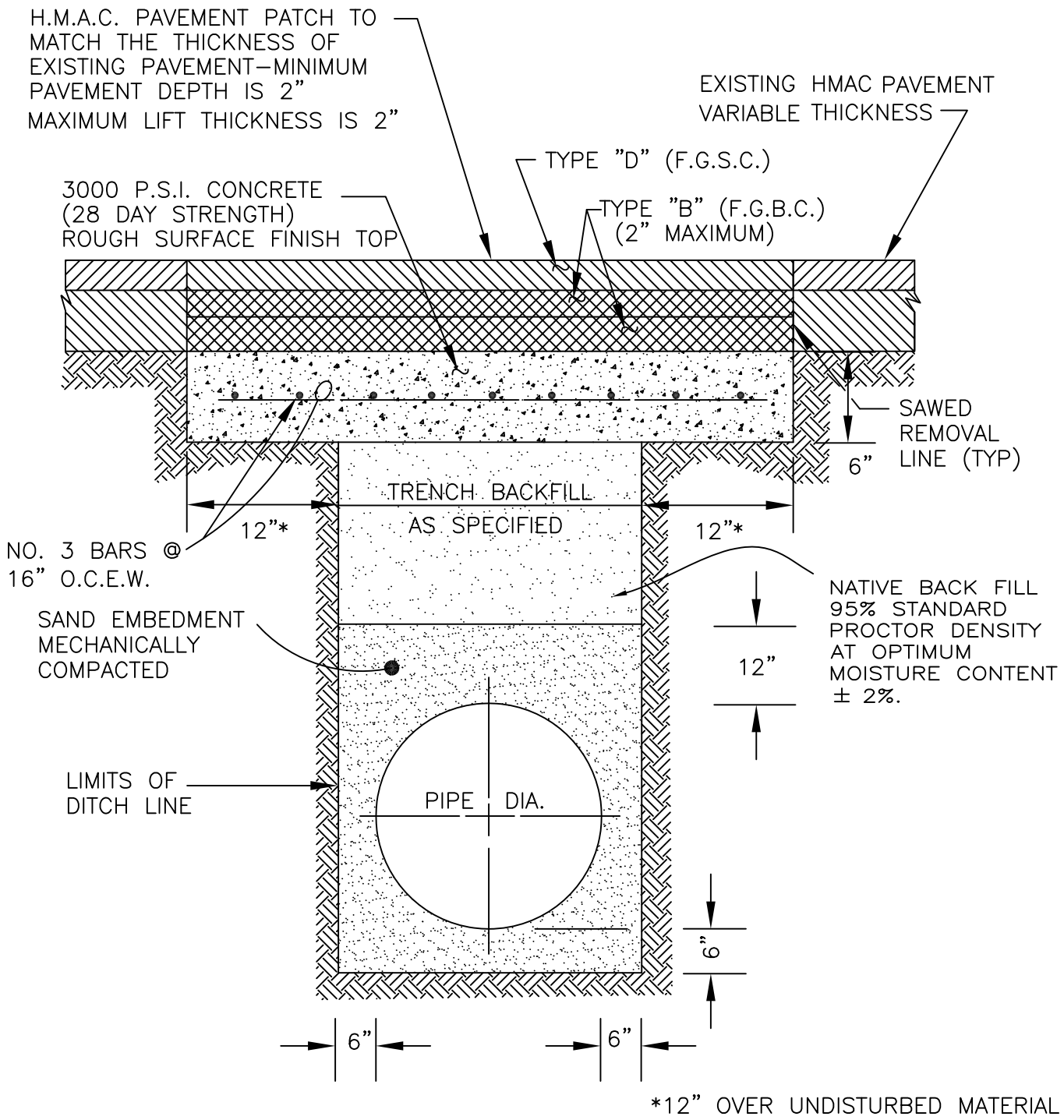

*12" OVER UNDISTURBED MATERIAL

PAVEMENT PATCH TYPE "B"

–NO STD SCALE–

TYPE "B" PAVEMENT PATCH	
CITY OF EULESS	
COE–PP–2	6/09

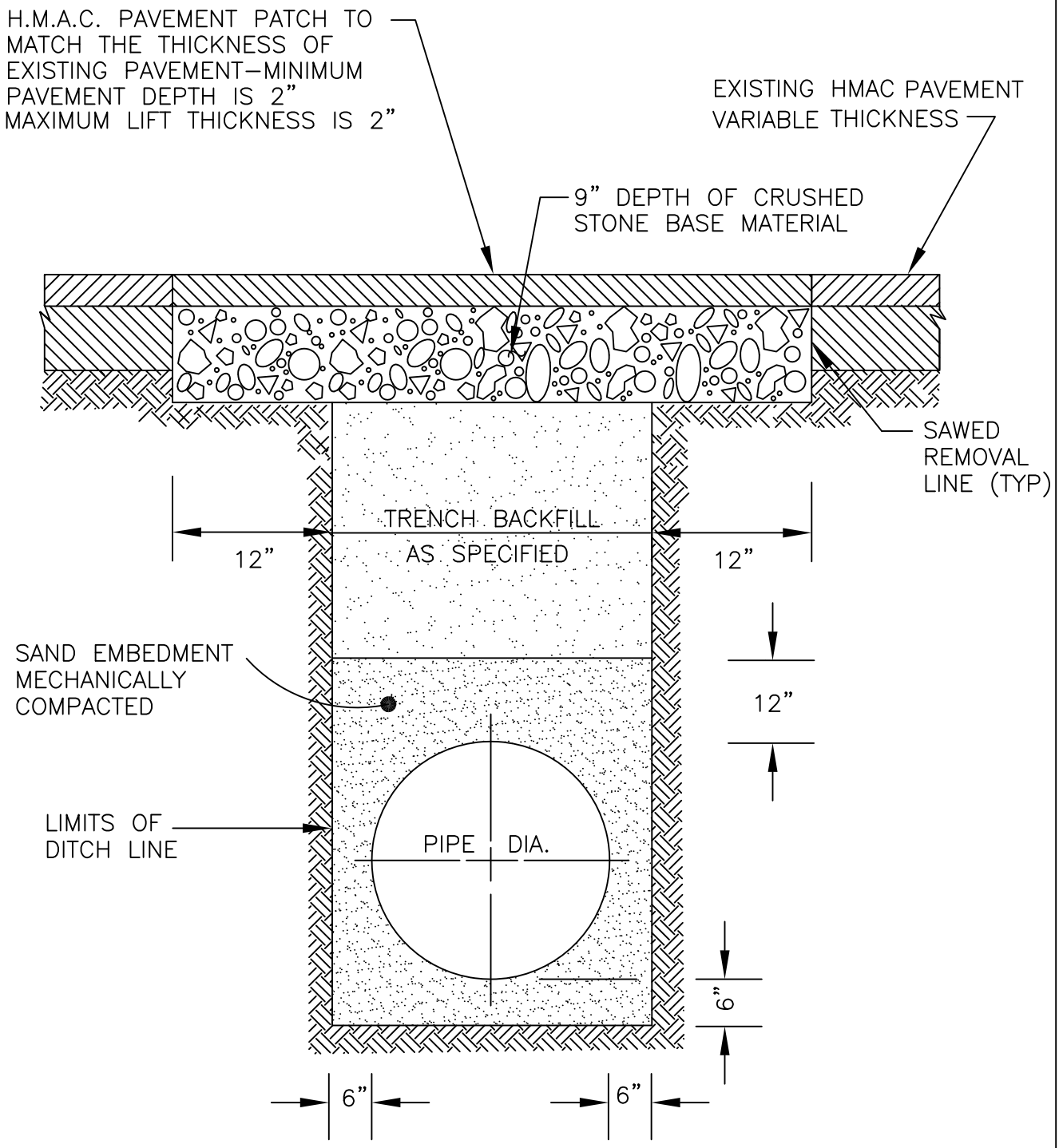

TEMPORARY ONLY

PAVEMENT PATCH TYPE "C"

–NO STD SCALE–

TYPE "C" PAVEMENT PATCH	
CITY OF EULESS	
COE–PP–3	1/01

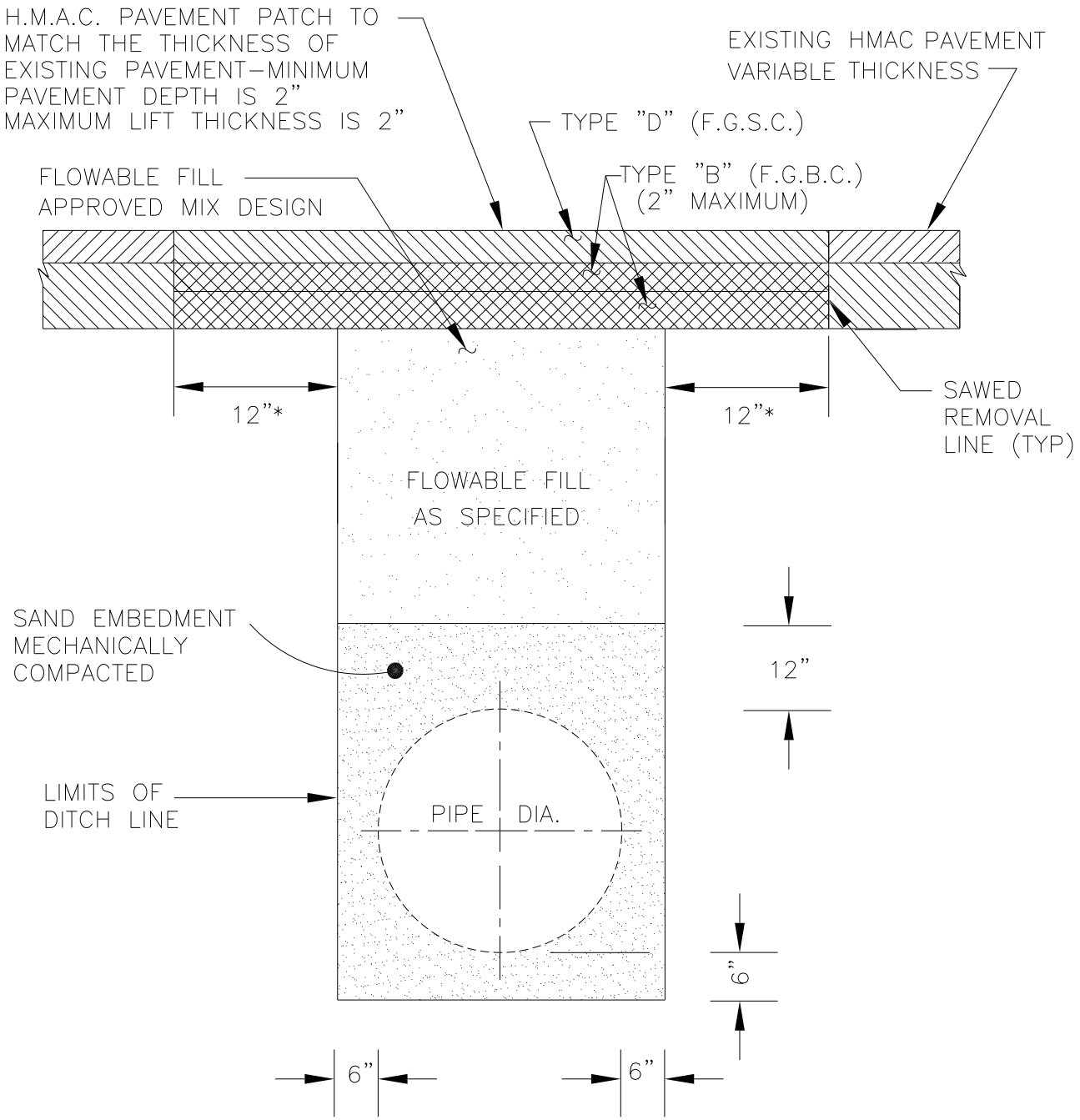

PAVEMENT PATCH TYPE "F"

–NO STD SCALE–

FLOWABLE FILL DESIGN VALUE

MIX NO.	9	
USE:	FLOWABLE FILL	
COMP STRENGTH:	200 PSI @ 28 DAYS	SACK: 2.13
SLUMP:	8" +/– 1"	
ENTRAINED AIR:	20% +/– 1.5%	Typical air content for flowable fill in accordance with ASTM.
TEMP RANGE:	50–90 °F	

1 CUBIC YARD MIX PROPORTIONS

COMPONENT	ASTM	TYPE	WEIGHT(LBS)	SPEC. GRAVITY	VOLUME (CF)
CEMENT	C150	I/II	50	3.15	0.25
FLY ASH	C618		150	2.7	0.89
COARSE AGGREGATE		none	0	0	0
FINE AGGREGATE BLEND	C33		2428	2.64	14.85
WATER		42gal	350	1	5.61
DESIGNED AIR					5.4
THEO. PLASTIC UNIT WT: 110.3 pcf			THEO. YIELD: 27 cf/cy		
WATER/CEMENTITIOUS MATERIALS RATIO: 1.75					
ADMINXTURES	ASTM	TYPE		Dosage/yard	oz/cwt
AIR ENTRAINING AGENT	C260	AEA		5 oz/cy	2.5
WATER REDUCER	C494			N/A	N/A
RETARDER	C494				
FIBERS					

*12" OVER UNDISTURBED MATERIAL

TYPE "F" PAVEMENT PATCH

CITY OF EULESS

COE–PP–4 1/15

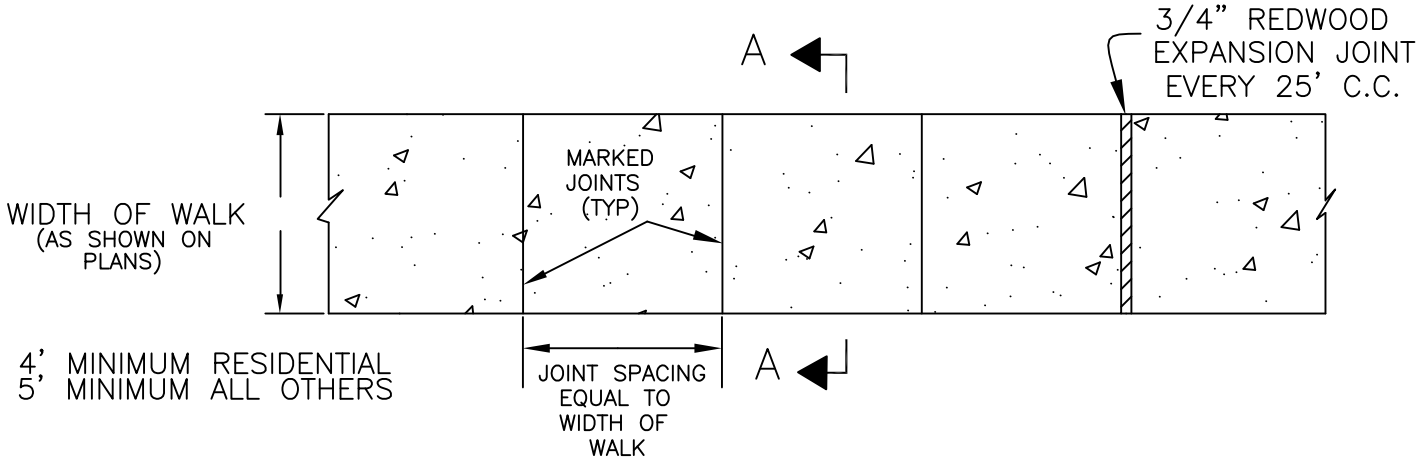

TYPICAL PLAN~SIDEWALK

– NO STD SCALE–

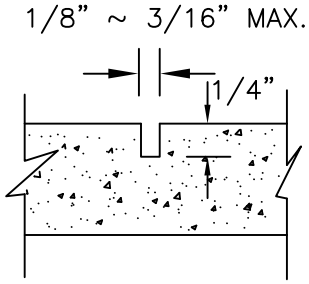

(TYPICAL)
MARKED JOINT
NO STD SCALE

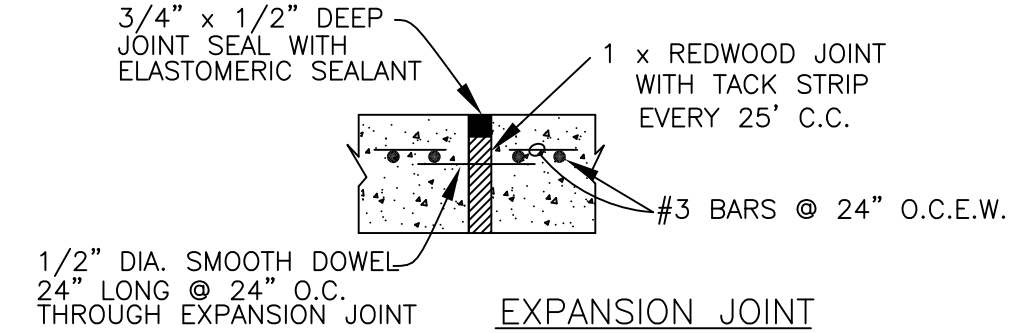

EXPANSION JOINT
NO STD SCALE

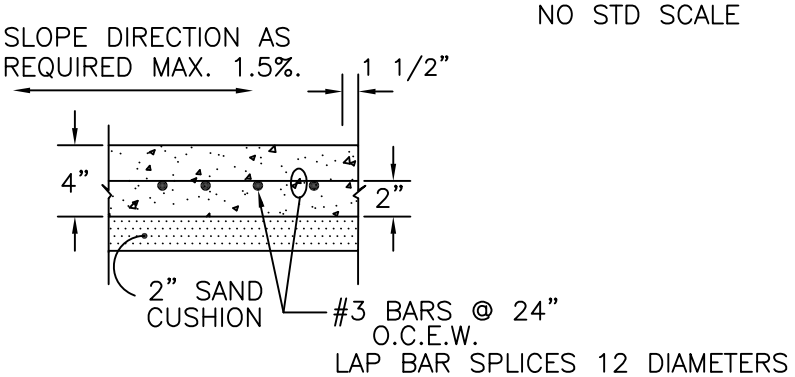

SECTION A–A
NO STD SCALE

NOTES:

1. ALL CONCRETE SHALL BE (3000 PSI) AT 28 DAYS.
2. TYPE 2 WHITE PIGMENTED CURING COMPOUND SHALL BE APPLIED TO ALL SIDEWALK.
3. SIDEWALK SHALL RECEIVE A LIGHT BROOM FINISH.
4. INSTALL 1/2" ASPHALT BOARD EXPANSION JOINT FILLER BETWEEN SIDEWALK AND BACK OF CURB OR OTHER FIXED OBJECTS.
5. WHERE NEW SIDEWALK TIES TO OLD OR EXISTING SIDEWALK AT OTHER THAN AN EXISTING EXPANSION JOINT, THE EXISTING REINFORCING STEEL SHALL BE TIED TO THE NEW REINFORCING STEEL.

TYPICAL SIDEWALK PLAN

CITY
OF
EULESS

COE–SW 04/12

General Notes

1. Curb ramps must contain a detectable warning surface that consists of raised truncated domes complying with Section 4.29 of the Texas Accessibility Standards (TAS). The surface must contrast visually with adjoining surfaces, including side flares. Furnish brick dark red detectable warning surface adjacent to uncolored concrete, unless specified elsewhere in the plans.

2. Detectable warning surfaces must be slip resistant and not allow water to accumulate.

3. Align truncated domes in the direction of pedestrian travel when entering the street.

4. Detectable warning surfaces shall be a minimum of 24" in depth in the direction of pedestrian travel, and extend the full width of the curb ramp or landing where the pedestrian access route enters the street.

5. Detectable warning surfaces shall be located so that the edge nearest the curb line is a minimum of 6" and a maximum of 10" from the extension of the face of curb. Detectable warning surfaces may be curved along the corner radius.

6. Landings shall be 60" X 60" with a slope no greater than 1.5% in any direction. Landings should have a slope no less than 0.5% for drainage.

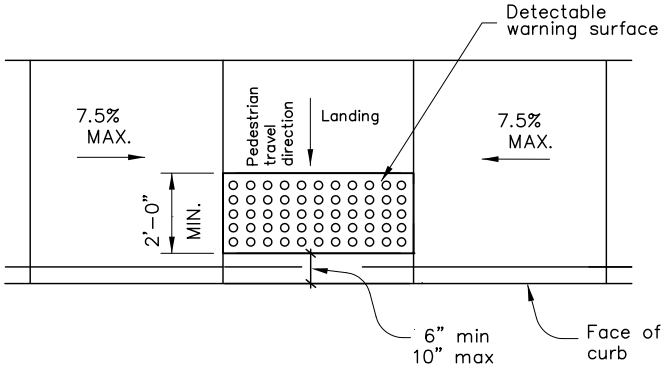

Typical placement of detectable warning surface on landing at street edge.

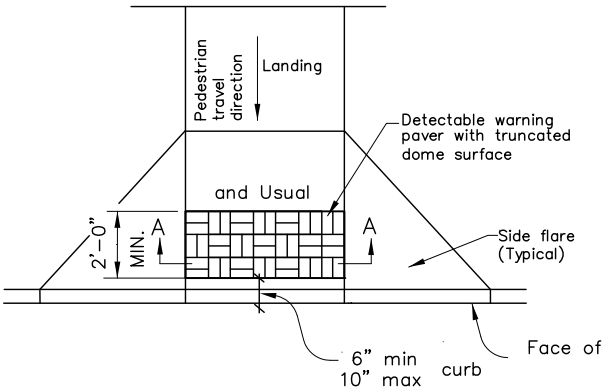

Truncated Dome Pattern Curb Ramp

COMPOSITION AND MANUFACTURE

The ADA Compliant Paver is made from a "no slump" concrete mix. Made under extreme pressure and high frequency vibrations, the ADA Compliant Paver has a compressive strength greater than 8000psi, a water absorption maximum of 5% and will meet or exceed ASTM C-936 and freeze-thaw testing per Section 8 of ASTM C-67.

INSTALLATION

1. Excavate unsuitable, unstable or unconsolidated subgrade material and compact the area. Form 3 $\frac{3}{8}$" deep box to receive the pave stones. Pour min, 4 inch 3000 PSI concrete structure base, with No. 3 rebar at 18" centers both ways , or as otherwise directed by Site Engineer/Architect/Landscape Architect. Engineering.

2. Place bedding course of washed sand conforming to the grading requirements of ASTM C-33 to a uniform depth of 1 in. (25-38mm) screeded to the grade and profile required.

3. Install the ADA Compliant Paver with joints approximately 1/8 in. (3mm).

4. Where required, cut pave stones with an approved cutting device to fit accurately, neatly and without damaged edges.

5. Tamp pave stones with a plate compactor, uniformly level, true to grade and free of movement.

6. Spread sand to 1/8 in. thickness over entire paving area.

7. Make one more pass with plate compactor to fill joints with sand.

DETECTABLE WARNING PAVER (OPTION)

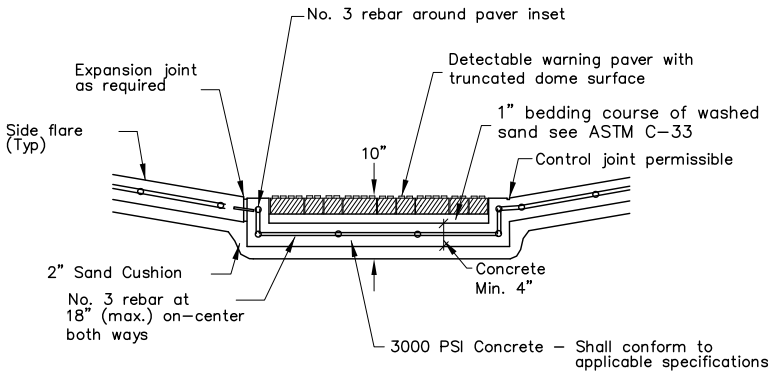

Section A-A

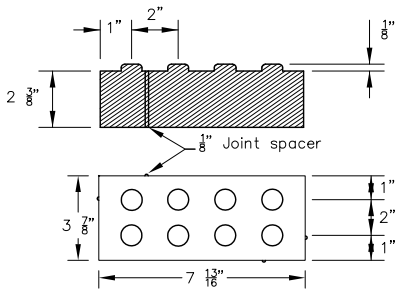

Detectable Warning Paver

General Notes (Pavers)

Furnish detectable warning paver units meeting all requirements of ASTM C-936, C-33. Lay in a two by two unit basket weave pattern or as directed.

Lay full-size units first followed by closure units consisting of at least 25 percent of a full unit. Cut detectable warning paver units using a power saw.

DETECTABLE WARNINGS

CITY OF EULESS

COE-DW 04/12

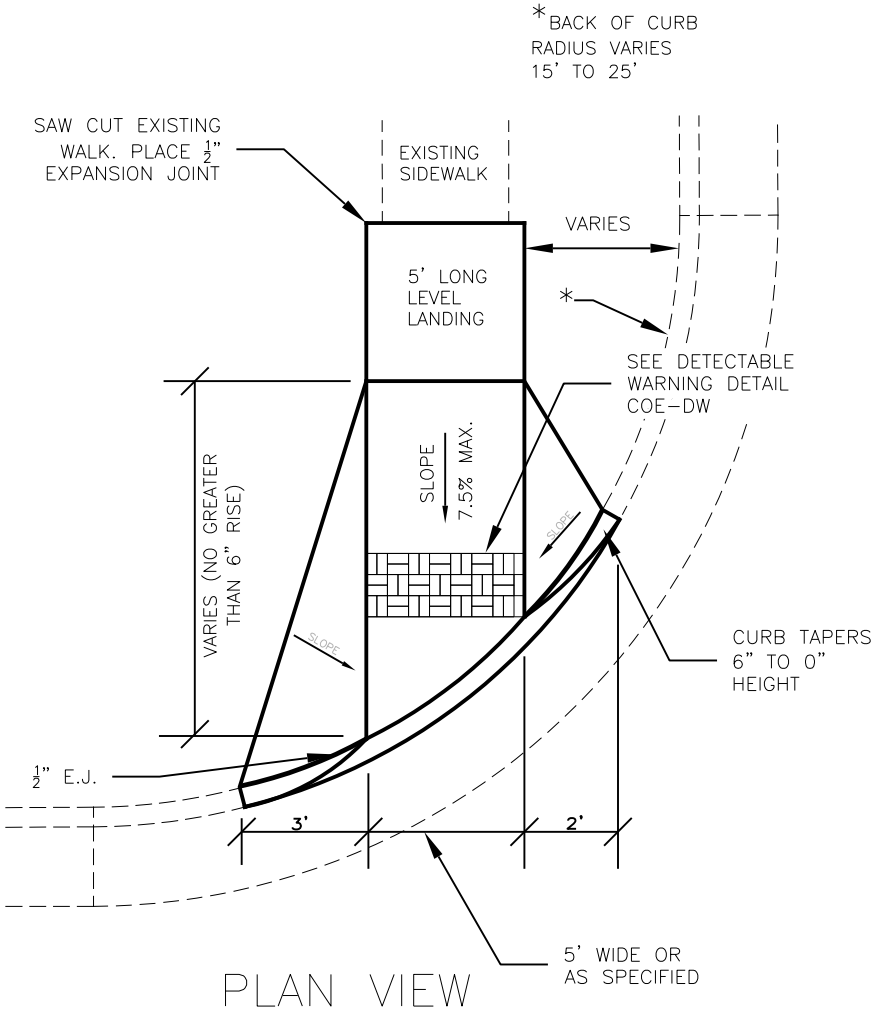

PLAN VIEW

-NO STD SCALE-

NOTES:

1. ALL EXISTING CONCRETE TO BE REMOVED SHALL BE SAWED.
2. ALL CONCRETE SHALL HAVE A 3000 PSI 28 DAY COMPRESSIVE STRENGTH.
3. TYPE 2 WHITE PIGMENTED CURING COMPOUND SHALL BE APPLIED TO ALL NEW CONCRETE.
4. RAMPS AND SIDEWALK SHALL RECEIVE A LIGHT BROOM FINISH, PERPENDICULAR TO THE DIRECTION OF TRAVEL.
5. ALL RAMPS SHALL HAVE TRUNCATED DOME BRICK INSTALLED IN BRICK RED COLOR. THE SLOPE SHALL BE LESS THAN OR EQUAL TO 7.5%. SEE DETAIL COE-DW FOR CONSTRUCTION OF DETECTABLE WARNING SECTION OF RAMP.
6. INSTALL 1/2-INCH PREFORMED BITUMINOUS FIBER EXPANSION JOINT AS SHOWN AND AS NOTED.
7. REINFORCEMENT IN EXISTING CURB AND GUTTER SHALL EXTEND TO THE NEW RAMP CONSTRUCTION. PLACE NO. 3 REBAR AT 18" CENTERS BOTH WAYS. PROVIDE 12" LONG NO. 3 DOWELS TO TIE NEW SIDEWALK/RAMPS TO EXISTING SIDEWALK AT 12" O.C.
8. LANDINGS SHALL BE 5' X 5' AND HAVE A SLOPE LESS THAN 1.5%.
9. THE BOTTOM OF DIAGONAL CURB RAMPS SHALL HAVE 48 INCHES MINIMUM CLEAR SPACE. MARKED CROSSINGS SHALL HAVE 48 IN CLEAR SPACE WITHIN THE MARKINGS.
10. FLARED SIDES SHALL HAVE AT LEAST A 24 INCH LONG SEGMENT OF CURB LOCATED ON EACH SIDE OF THE CURB RAMP WITHIN THE MARKED CROSSING.

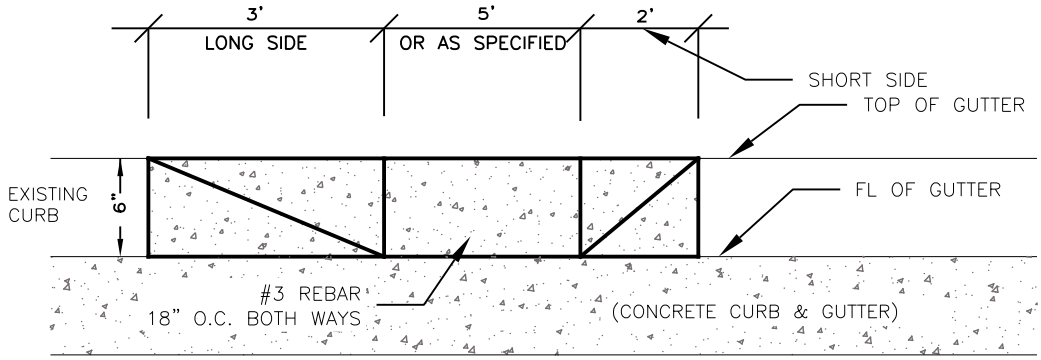

ELEVATION VIEW

-NO STD SCALE-

TYPE A RAMP

CITY
OF
EULESS

COE-HC-1 11/16

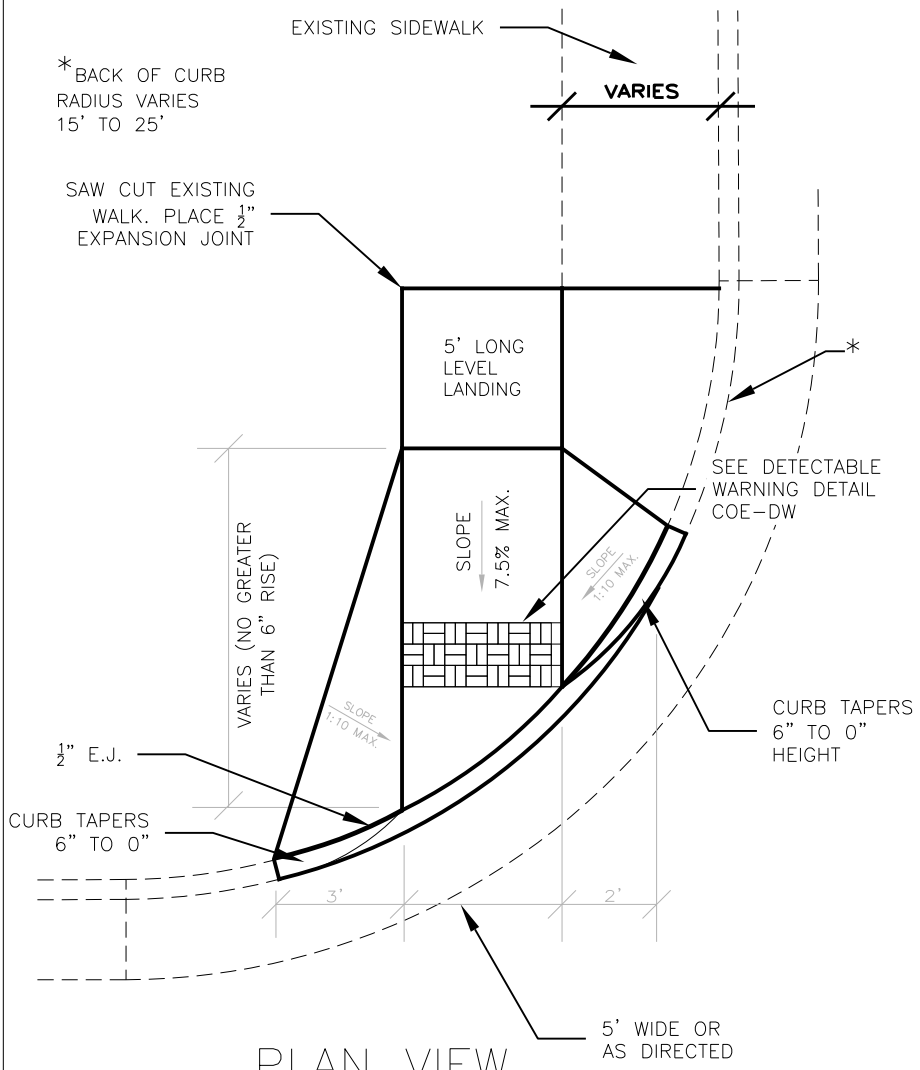

PLAN VIEW

-NO STD SCALE-

NOTES:

1. ALL EXISTING CONCRETE TO BE REMOVED SHALL BE SAWED.
2. ALL CONCRETE SHALL HAVE A 3000 PSI 28 DAY COMPRESSIVE STRENGTH.
3. TYPE 2 WHITE PIGMENTED CURING COMPOUND SHALL BE APPLIED TO ALL NEW CONCRETE.
4. RAMPS AND SIDEWALK SHALL RECEIVE A LIGHT BROOM FINISH, PERPENDICULAR TO THE DIRECTION OF TRAVEL.
5. ALL RAMPS SHALL HAVE TRUNCATED DOME BRICK INSTALLED IN BRICK RED COLOR. THE SLOPE SHALL BE LESS THAN OR EQUAL TO 7.5%. SEE DETAIL COE-DW FOR CONSTRUCTION OF DETECTABLE WARNING SECTION OF RAMP.
6. INSTALL 1/2-INCH PREFORMED BITUMINOUS FIBER EXPANSION JOINT AS SHOWN AND AS NOTED.
7. REINFORCEMENT IN EXISTING CURB AND GUTTER SHALL EXTEND TO THE NEW RAMP CONSTRUCTION. PLACE NO. 3 REBAR AT 18" CENTERS BOTH WAYS. PROVIDE 12" LONG NO. 3 DOWELS TO TIE NEW SIDEWALK/RAMPS TO EXISTING SIDEWALK AT 12" O.C.
8. LANDINGS SHALL BE 5' X 5' AND HAVE A SLOPE LESS THAN 1.5%.
9. THE BOTTOM OF DIAGONAL CURB RAMPS SHALL HAVE 48 INCHES MINIMUM CLEAR SPACE. MARKED CROSSINGS SHALL HAVE 48 IN CLEAR SPACE WITHIN THE MARKINGS.
10. FLARED SIDES SHALL HAVE AT LEAST A 24 INCH LONG SEGMENT OF CURB LOCATED ON EACH SIDE OF THE CURB RAMP WITHIN THE MARKED CROSSING.

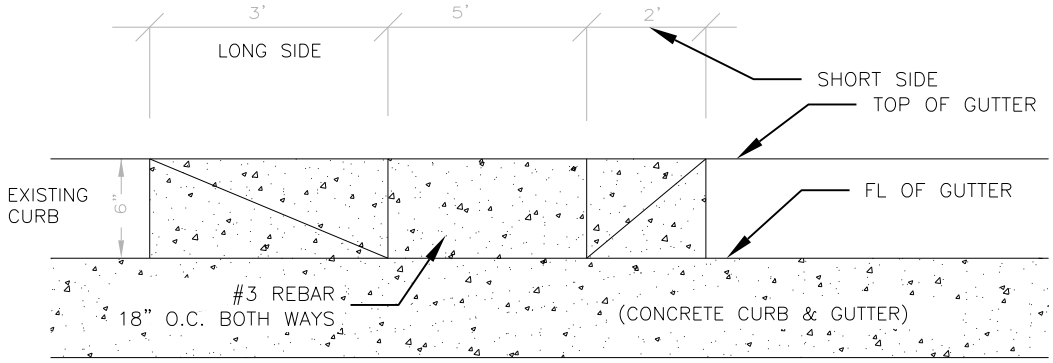

ELEVATION VIEW

-NO STD SCALE-

TYPE B RAMP

CITY OF EULESS

COE-HC-2 11/16

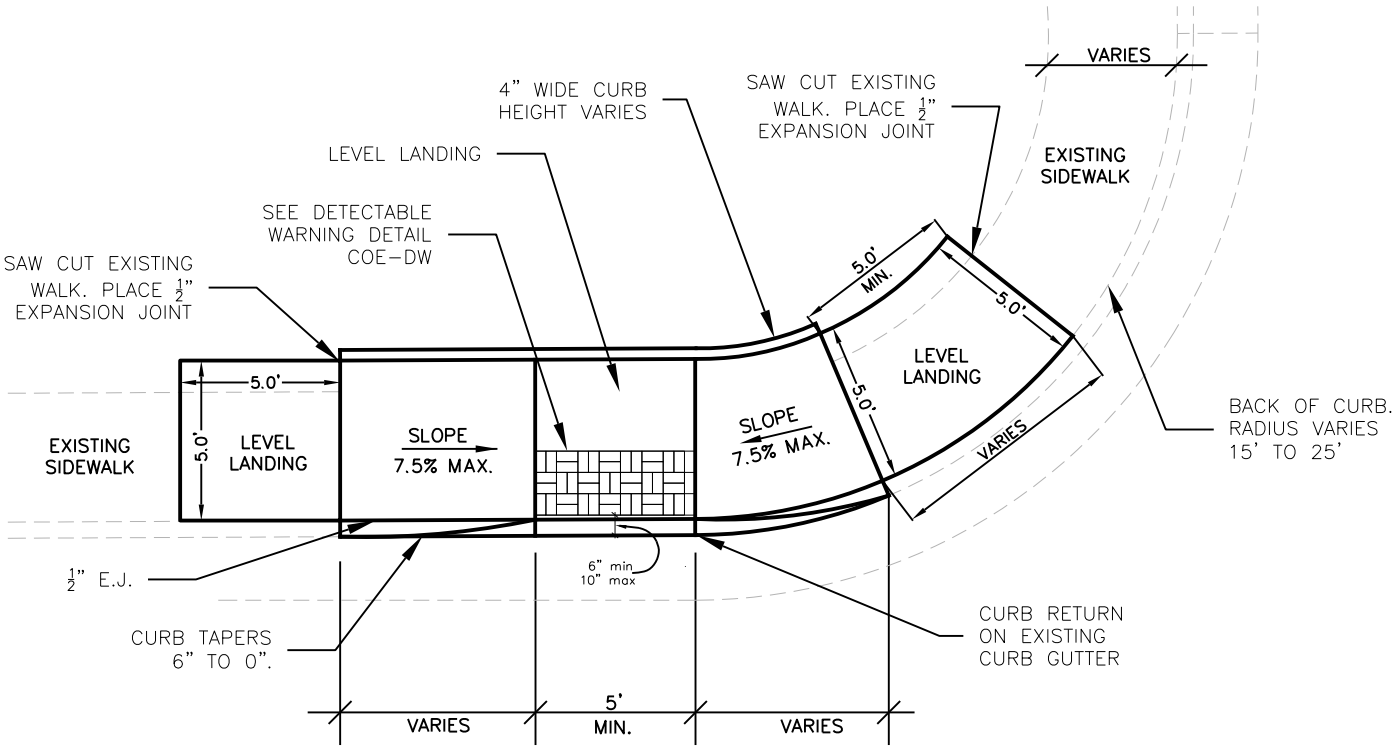

PLAN VIEW

-NO STD SCALE-

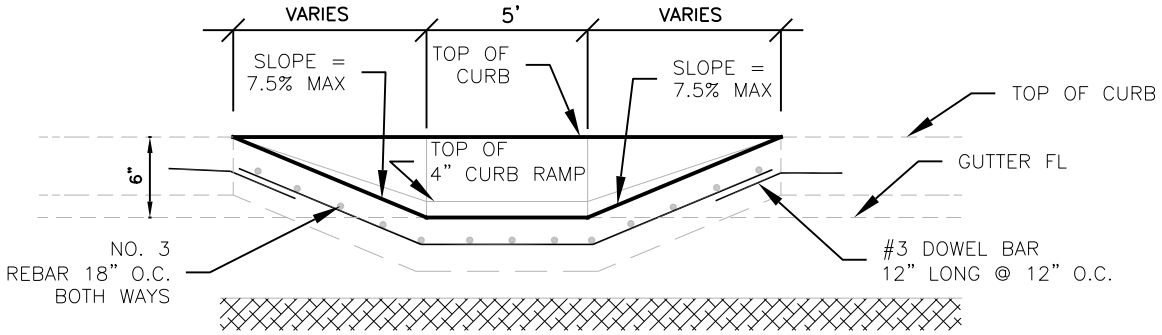

ELEVATION VIEW

-NO STD SCALE-

NOTES:

1. ALL EXISTING CONCRETE TO BE REMOVED SHALL BE SAWED.
2. ALL CONCRETE SHALL HAVE A 3000 PSI 28 DAY COMPRESSIVE STRENGTH.
3. TYPE 2 WHITE PIGMENTED CURING COMPOUND SHALL BE APPLIED TO ALL NEW CONCRETE.
4. RAMPS AND SIDEWALK SHALL RECEIVE A LIGHT BROOM FINISH, PERPENDICULAR TO THE DIRECTION OF TRAVEL.
5. ALL RAMPS SHALL HAVE TRUNCATED DOME BRICK INSTALLED IN BRICK RED COLOR. THE SLOPE SHALL BE LESS THAN OR EQUAL TO 7.5%. SEE DETAIL COE-DW FOR CONSTRUCTION OF DETECTABLE WARNING SECTION OF RAMP.
6. INSTALL 1/2-INCH PREFORMED BITUMINOUS FIBER EXPANSION JOINT AS SHOWN AND AS NOTED.
7. REINFORCEMENT IN EXISTING CURB AND GUTTER SHALL EXTEND TO THE NEW RAMP CONSTRUCTION. PLACE NO. 3 REBAR AT 18" CENTERS BOTH WAYS. PROVIDE 12" LONG NO. 3 DOWELS TO TIE NEW SIDEWALK/RAMPS TO EXISTING SIDEWALK AT 12" O.C.
8. LANDINGS SHALL BE 5' X 5' AND HAVE A SLOPE LESS THAN 1.5%.
9. THE BOTTOM OF DIAGONAL CURB RAMPS SHALL HAVE 48 INCHES MINIMUM CLEAR SPACE. MARKED CROSSINGS SHALL HAVE 48 IN CLEAR SPACE WITHIN THE MARKINGS.
10. FLARED SIDES SHALL HAVE AT LEAST A 24 INCH LONG SEGMENT OF CURB LOCATED ON EACH SIDE OF THE CURB RAMP WITHIN THE MARKED CROSSING.

TYPE C RAMP

CITY OF EULESS

COE-HC-4 10/16

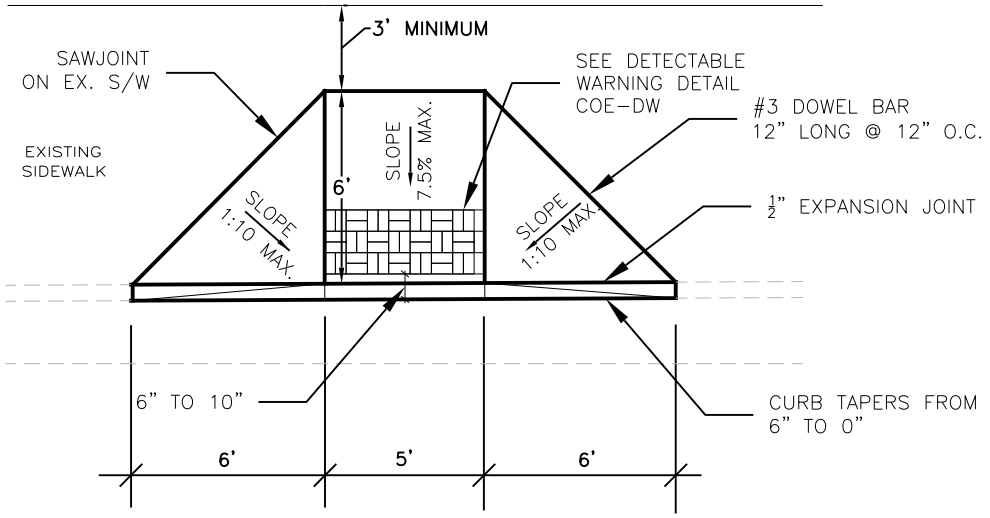

PLAN VIEW

–NO STD SCALE–

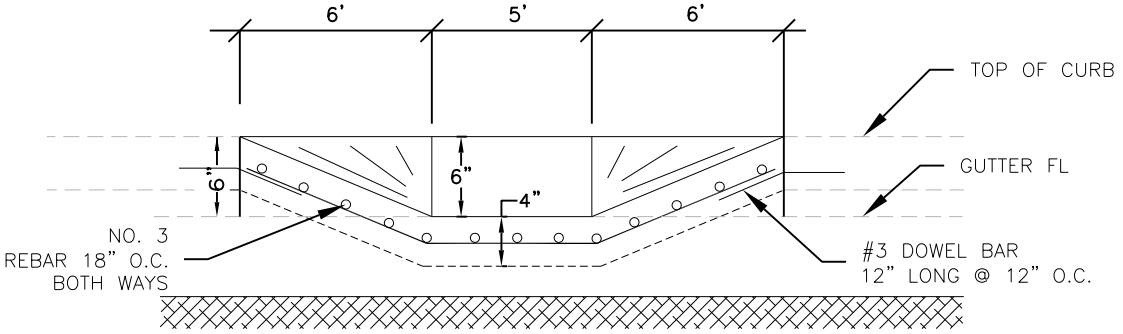

ELEVATION VIEW

–NO STD SCALE–

NOTES:

1. ALL EXISTING CONCRETE TO BE REMOVED SHALL BE SAWED.
2. ALL CONCRETE SHALL HAVE A 3000 PSI 28 DAY COMPRESSIVE STRENGTH.
3. TYPE 2 WHITE PIGMENTED CURING COMPOUND SHALL BE APPLIED TO ALL NEW CONCRETE.
4. RAMPS AND SIDEWALK SHALL RECEIVE A LIGHT BROOM FINISH, PERPENDICULAR TO THE DIRECTION OF TRAVEL.
5. ALL RAMPS SHALL HAVE TRUNCATED DOME BRICK INSTALLED IN BRICK RED COLOR. THE SLOPE SHALL BE LESS THAN OR EQUAL TO 7.5%. SEE DETAIL COE–DW FOR CONSTRUCTION OF DETECTABLE WARNING SECTION OF RAMP.
6. INSTALL 1/2–INCH PREFORMED BITUMINOUS FIBER EXPANSION JOINT AS SHOWN AND AS NOTED.
7. REINFORCEMENT IN EXISTING CURB AND GUTTER SHALL EXTEND TO THE NEW RAMP CONSTRUCTION. PLACE NO. 3 REBAR AT 18" CENTERS BOTH WAYS. PROVIDE 12" LONG NO. 3 DOWELS TO TIE NEW SIDEWALK/RAMPS TO EXISTING SIDEWALK AT 12" O.C.
8. LANDINGS SHALL BE 5' X 5' AND HAVE A SLOPE LESS THAN 1.5%.
9. THE BOTTOM OF DIAGONAL CURB RAMPS SHALL HAVE 48 INCHES MINIMUM CLEAR SPACE. MARKED CROSSINGS SHALL HAVE 48 IN CLEAR SPACE WITHIN THE MARKINGS.
10. FLARED SIDES SHALL HAVE AT LEAST A 24 INCH LONG SEGMENT OF CURB LOCATED ON EACH SIDE OF THE CURB RAMP WITHIN THE MARKED CROSSING.

TYPE E RAMP

CITY
OF
EULESS

COE–HC–5

11/16

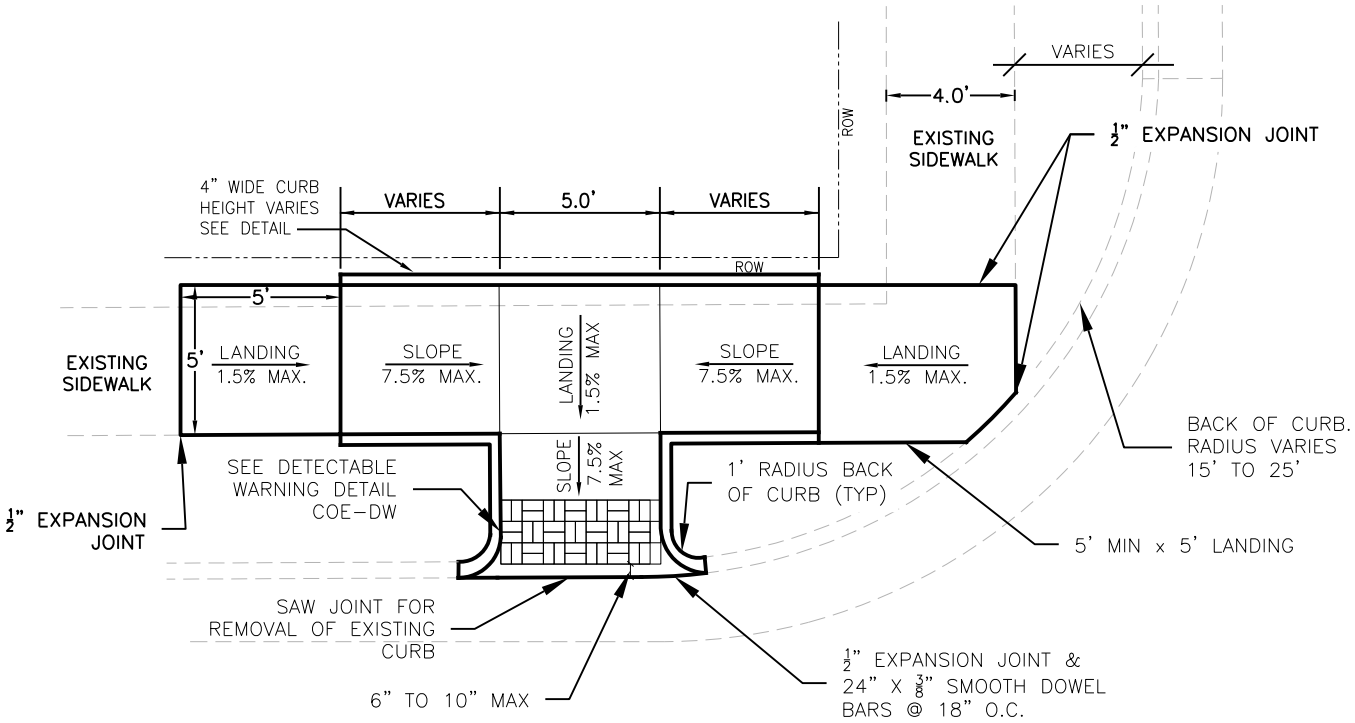

PLAN VIEW

-NO STD SCALE-

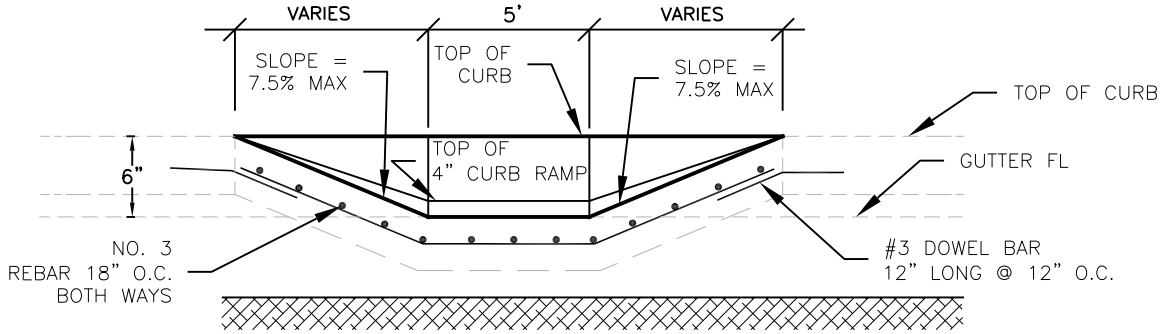

ELEVATION VIEW

-NO STD SCALE-

NOTES:

1. ALL EXISTING CONCRETE TO BE REMOVED SHALL BE SAWED.
2. ALL CONCRETE SHALL HAVE A 3000 PSI 28 DAY COMPRESSIVE STRENGTH.
3. TYPE 2 WHITE PIGMENTED CURING COMPOUND SHALL BE APPLIED TO ALL NEW CONCRETE.
4. RAMPS AND SIDEWALK SHALL RECEIVE A LIGHT BROOM FINISH, PERPENDICULAR TO THE DIRECTION OF TRAVEL.
5. ALL RAMPS SHALL HAVE TRUNCATED DOME BRICK INSTALLED IN BRICK RED COLOR. THE SLOPE SHALL BE LESS THAN OR EQUAL TO 7.5%. SEE DETAIL COE-DW FOR CONSTRUCTION OF DETECTABLE WARNING SECTION OF RAMP.
6. INSTALL 1/2-INCH PREFORMED BITUMINOUS FIBER EXPANSION JOINT AS SHOWN AND AS NOTED.
7. REINFORCEMENT IN EXISTING CURB AND GUTTER SHALL EXTEND TO THE NEW RAMP CONSTRUCTION. PLACE NO. 3 REBAR AT 18" CENTERS BOTH WAYS. PROVIDE DOWELS TO TIE NEW SIDEWALK/RAMPS TO EXISTING SIDEWALK.
8. LANDINGS SHALL BE 5' X 5' AND HAVE A SLOPE LESS THAN 1.5%.
9. THE BOTTOM OF DIAGONAL CURB RAMPS SHALL HAVE 48 INCHES MINIMUM CLEAR SPACE. MARKED CROSSINGS SHALL HAVE 48 IN CLEAR SPACE WITHIN THE MARKINGS.
10. FLARED SIDES SHALL HAVE AT LEAST A 24 INCH LONG SEGMENT OF CURB LOCATED ON EACH SIDE OF THE CURB RAMP WITHIN THE MARKED CROSSING.

TYPE F RAMP

CITY OF EULESS

COE-HC-6 04/12

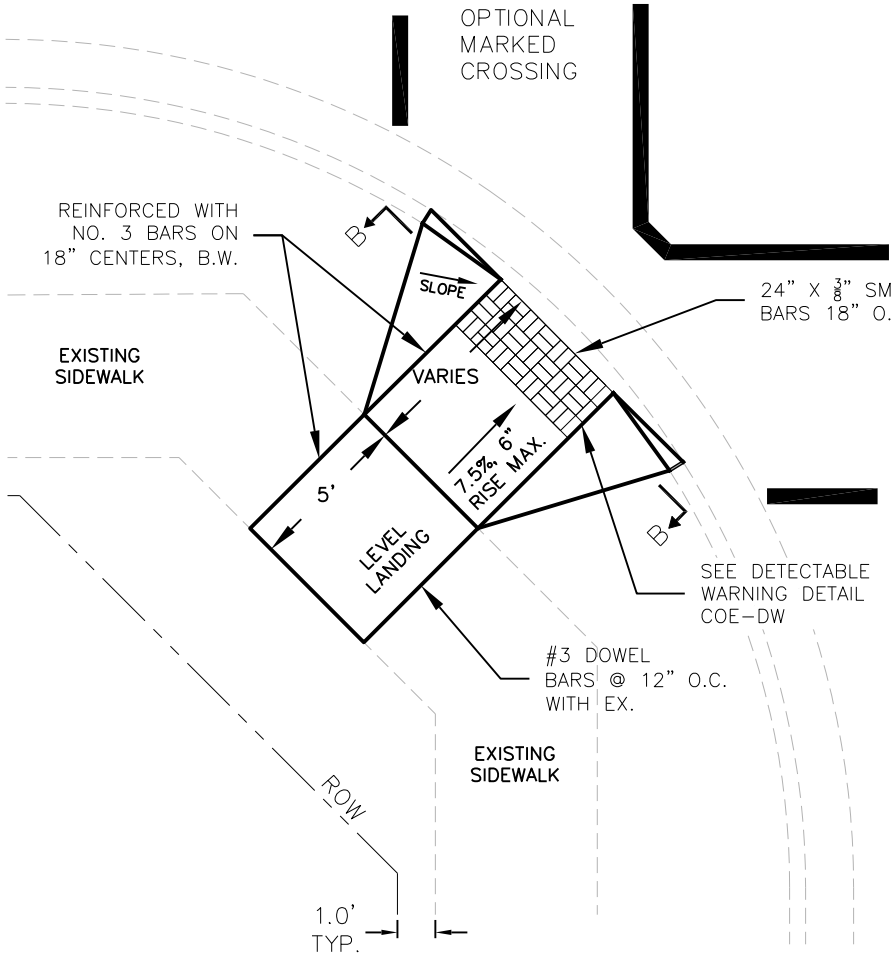

PLAN

-NO STD SCALE-

NOTES:

1. ALL EXISTING CONCRETE TO BE REMOVED SHALL BE SAWED.
2. ALL CONCRETE SHALL HAVE A 3000 PSI 28 DAY COMPRESSIVE STRENGTH.
3. TYPE 2 WHITE PIGMENTED CURING COMPOUND SHALL BE APPLIED TO ALL NEW CONCRETE.
4. RAMPS AND SIDEWALK SHALL RECEIVE A LIGHT BROOM FINISH, PERPENDICULAR TO THE DIRECTION OF TRAVEL.
5. ALL RAMPS SHALL HAVE TRUNCATED DOME BRICK INSTALLED IN BRICK RED COLOR. THE SLOPE SHALL BE LESS THAN OR EQUAL TO 7.5%. SEE DETAIL COE-DW FOR CONSTRUCTION OF DETECTABLE WARNING SECTION OF RAMP.
6. INSTALL 1/2-INCH PREFORMED BITUMINOUS FIBER EXPANSION JOINT AS SHOWN AND AS NOTED.
7. REINFORCEMENT IN EXISTING CURB AND GUTTER SHALL EXTEND TO THE NEW RAMP CONSTRUCTION. PLACE NO. 3 REBAR AT 18" CENTERS BOTH WAYS. PROVIDE 12" LONG NO. 3 DOWELS TO TIE NEW SIDEWALK/RAMPS TO EXISTING SIDEWALK AT 12" O.C.
8. LANDINGS SHALL BE 5' X 5' AND HAVE A SLOPE LESS THAN 1.5%.
9. THE BOTTOM OF DIAGONAL CURB RAMPS SHALL HAVE 48 INCHES MINIMUM CLEAR SPACE. MARKED CROSSINGS SHALL HAVE 48 IN CLEAR SPACE WITHIN THE MARKINGS.
10. FLARED SIDES SHALL HAVE AT LEAST A 24 INCH LONG SEGMENT OF CURB LOCATED ON EACH SIDE OF THE CURB RAMP WITHIN THE MARKED CROSSING.

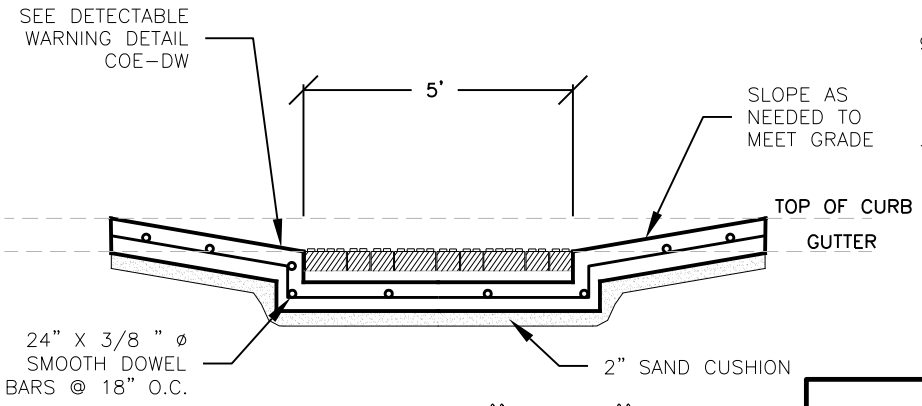

SECTION "B-B"

-NO STD SCALE-

TYPE G RAMP

CITY
OF
EULESS

COE-HC-9

11/16

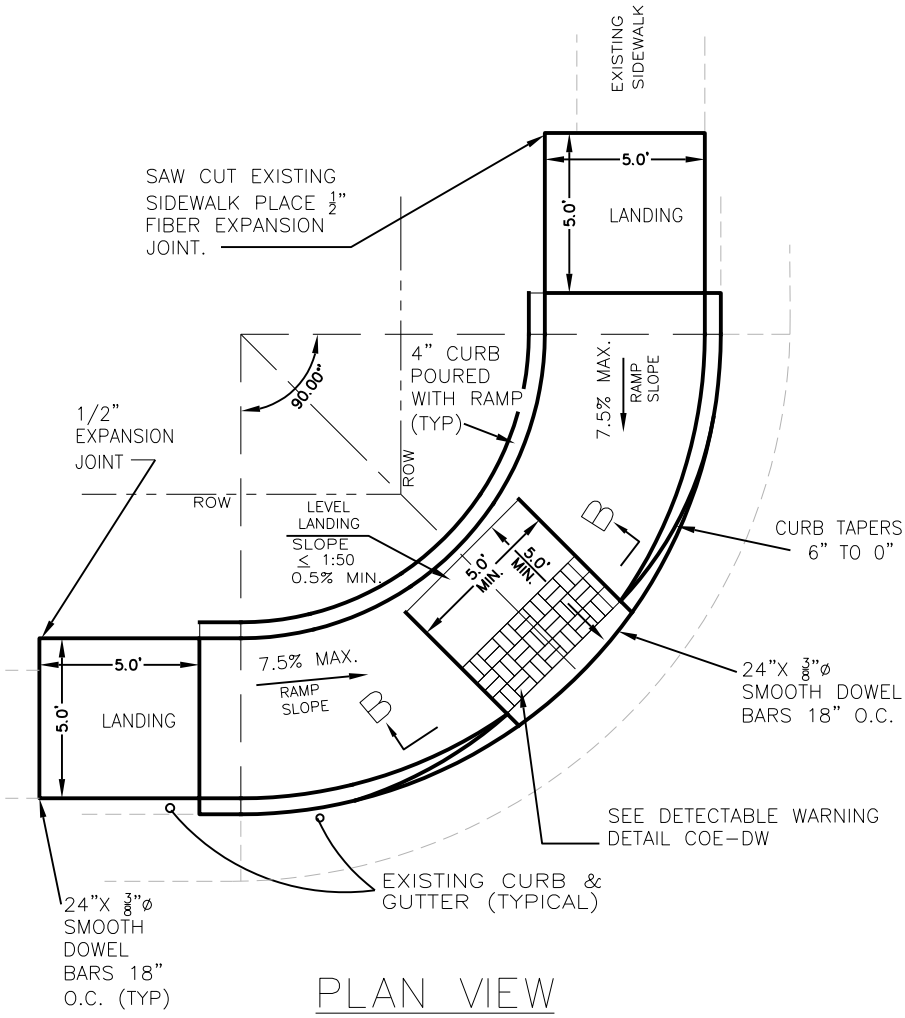

PLAN VIEW

-NO STD SCALE-

NOTES:

1. ALL EXISTING CONCRETE TO BE REMOVED SHALL BE SAWED.
2. ALL CONCRETE SHALL HAVE A 3000 PSI 28 DAY COMPRESSIVE STRENGTH.
3. TYPE 2 WHITE PIGMENTED CURING COMPOUND SHALL BE APPLIED TO ALL NEW CONCRETE.
4. RAMPS AND SIDEWALK SHALL RECEIVE A LIGHT BROOM FINISH, PERPENDICULAR TO THE DIRECTION OF TRAVEL.
5. ALL RAMPS SHALL HAVE TRUNCATED DOME BRICK INSTALLED IN BRICK RED COLOR. THE SLOPE SHALL BE LESS THAN OR EQUAL TO 7.5%. SEE DETAIL COE-DW FOR CONSTRUCTION OF DETECTABLE WARNING SECTION OF RAMP.
6. INSTALL 1/2-INCH PREFORMED BITUMINOUS FIBER EXPANSION JOINT AS SHOWN AND AS NOTED.
7. REINFORCEMENT IN EXISTING CURB AND GUTTER SHALL EXTEND TO THE NEW RAMP CONSTRUCTION. PLACE NO. 3 REBAR AT 18" CENTERS BOTH WAYS. PROVIDE 12" LONG NO. 3 DOWELS TO TIE NEW SIDEWALK/RAMPS TO EXISTING SIDEWALK AT 12" O.C.
8. LANDINGS SHALL BE 5' X 5' AND HAVE A SLOPE LESS THAN 1.5%.
9. THE BOTTOM OF DIAGONAL CURB RAMPS SHALL HAVE 48 INCHES MINIMUM CLEAR SPACE. MARKED CROSSINGS SHALL HAVE 48 IN CLEAR SPACE WITHIN THE MARKINGS.
10. FLARED SIDES SHALL HAVE AT LEAST A 24 INCH LONG SEGMENT OF CURB LOCATED ON EACH SIDE OF THE CURB RAMP WITHIN THE MARKED CROSSING.

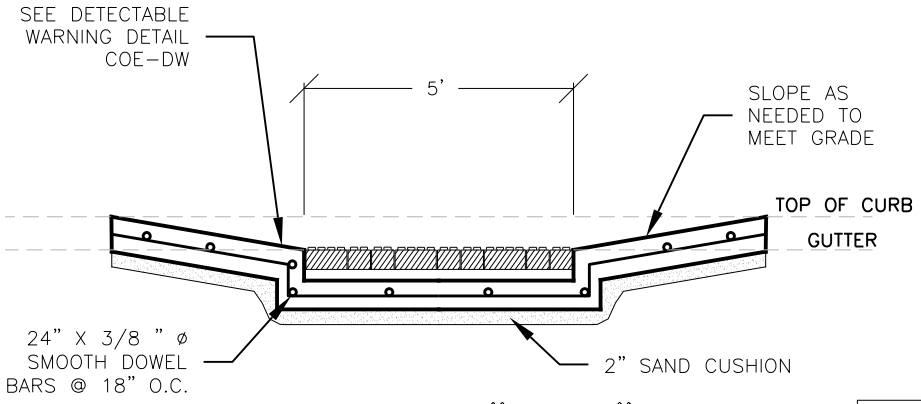

SECTION "B-B"

-NO STD SCALE-

TYPE H RAMP

CITY OF EULESS

COE-HC-10

11/16

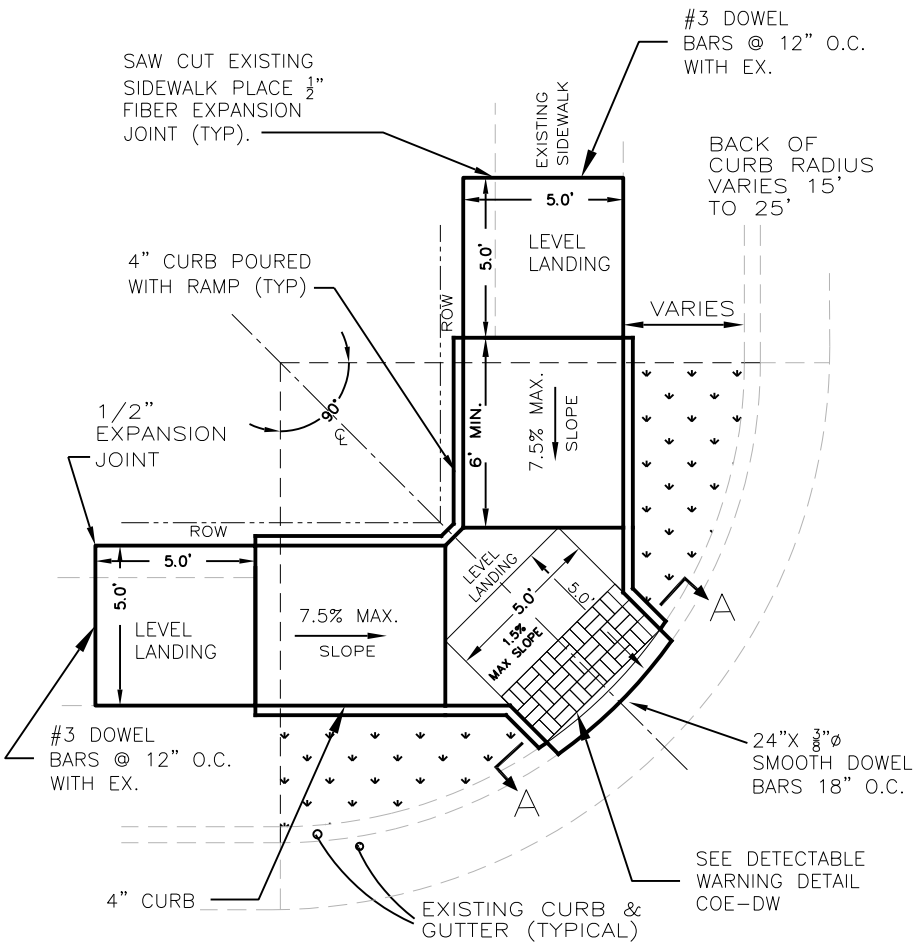

PLAN VIEW

-NO STD. SCALE-

NOTES:

1. ALL EXISTING CONCRETE TO BE REMOVED SHALL BE SAWED.
2. ALL CONCRETE SHALL HAVE A 3000 PSI 28 DAY COMPRESSIVE STRENGTH.
3. TYPE 2 WHITE PIGMENTED CURING COMPOUND SHALL BE APPLIED TO ALL NEW CONCRETE.
4. RAMPS AND SIDEWALK SHALL RECEIVE A LIGHT BROOM FINISH, PERPENDICULAR TO THE DIRECTION OF TRAVEL.
5. ALL RAMPS SHALL HAVE TRUNCATED DOME BRICK INSTALLED IN BRICK RED COLOR. THE SLOPE SHALL BE LESS THAN OR EQUAL TO 7.5%. SEE DETAIL COE-DW FOR CONSTRUCTION OF DETECTABLE WARNING SECTION OF RAMP.
6. INSTALL 1/2-INCH PREFORMED BITUMINOUS FIBER EXPANSION JOINT AS SHOWN AND AS NOTED.
7. REINFORCEMENT IN EXISTING CURB AND GUTTER SHALL EXTEND TO THE NEW RAMP CONSTRUCTION. PLACE NO. 3 REBAR AT 18" CENTERS BOTH WAYS. PROVIDE 12" LONG NO. 3 DOWELS TO TIE NEW SIDEWALK/RAMPS TO EXISTING SIDEWALK AT 12" O.C.
8. LANDINGS SHALL BE 5' X 5' AND HAVE A SLOPE LESS THAN 1.5%.
9. THE BOTTOM OF DIAGONAL CURB RAMPS SHALL HAVE 48 INCHES MINIMUM CLEAR SPACE. MARKED CROSSINGS SHALL HAVE 48 IN CLEAR SPACE WITHIN THE MARKINGS.
10. FLARED SIDES SHALL HAVE AT LEAST A 24 INCH LONG SEGMENT OF CURB LOCATED ON EACH SIDE OF THE CURB RAMP WITHIN THE MARKED CROSSING.

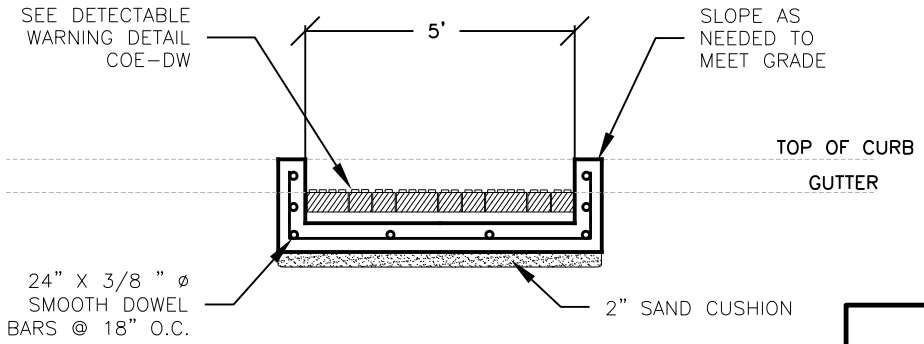

SECTION "A-A"

-NO STD SCALE-

TYPE J RAMP

CITY OF EULESS

COE-HC-11

11/16

TYPE: FILTRATION SYSTEM (UNDERGROUND SAND FILTER)

DESCRIPTION : A filtration system is a structural water quality control device that captures, temporarily stores, treats and releases stormwater runoff. The filtration system consists of two main components :
(1) a pretreatment basin and
(2) a filtration chamber.

APPLICABILITY: Car washes, fueling facilities, automotive maintenance and repair facilities.

DESIGN:
(1) Use for applications with space constraints.
(2) Use to handle runoff from an impervious area of 1 acre or less
(3) Use as an on–line system
(4) Provide access points to the filter
(5) Provide a positive surface over flow route

MAINTENANCE:

MONTHLY
(1) Remove trash or debris
(2) Inspect the filter for clogging

QUARTERLY
(1) Check for signs of damage
(2) Check the filter level

ANNUALLY
(1) Remove or replace any damaged parts
(2) Remove sediment as necessary
(3) Replace filter material as necessary

POST–CONSTRUCTION
BEST MANAGEMENT PRACTICES

CITY
OF
EULESS

COE–PC–BMP–1 4/10

TYPE: GREASE MANAGEMENT

DESCRIPTION : The disposal of grease waste can become a significant source of pollution in creeks and streams if not managed properly. Spills, overflows, and leaks may occur due to poor maintenance of grease collection/storage facilities and lack of proper disposal education.

APPLICABILITY: Restaurants, caterers, food preparation facilities

DESIGN:
(1) Grease traps should be underground.
(2) Size of grease traps should be coordinated with the Building official.
(3) Location of grease traps should be accessible for maintenance.

MAINTENANCE: <u>WEEKLY</u>
(1) Check grease level and dispose of the grease if necessary.
(2) Check for signs of malfunction.

<u>MONTHLY</u>
(1) Check for signs of damage
(2) Make repairs if necessary

POST–CONSTRUCTION
BEST MANAGEMENT PRACTICES

CITY
OF
EULESS

COE–PC–BMP–2 4/10

TYPE: STORMWATER DETENTION POND

DESCRIPTION : Stormwater detention ponds are relatively small collection ponds that detain stormwater runoff for a short period of time to allow sediment and floatables to precipitate. Stormwater detention ponds also allow the peak flow in a receiving system to pass prior to release from the pond.

APPLICABILITY: Large developments (retail, commercial, or residential) that generate runoff that exceeds the capacity of the receiving drainage system.

DESIGN:
(1) Coordinate the pond capacity with the City Engineer.
(2) Outlet structure designed to completely drain the pond.

MAINTENANCE:

WEEKLY
(1) Remove floatables
(2) Check outlet structure for obstructions

QUARTERLY
(1) Check for standing water
(2) Treat for mosquitoes as necessary

ANNUALLY
(1) Remove sediment to maintain capacity
(2) Perform repairs on the outlet structure as necessary.

POST–CONSTRUCTION
BEST MANAGEMENT PRACTICES

CITY
OF
EULESS

COE–PC–BMP–3 4/10

TYPE: INFILTRATION SYSTEM

DESCRIPTION : Infiltration systems are depressions with no outfall. They are used to detain stormwater for a short period of time, until the stormwater percolates into the ground.

APPLICABILITY: Retail and commercial developments with large parking areas.

DESIGN:

(1) A soils investigation must be performed to determine the characteristics.
(2) The receiving soil must have a infiltration rate of 0.6 inches per hour or greater.
(3) Receiving soil must have a clay content of less than 20% and a silt/clay content of less than 40%.
(4) The maximum contributing drainage area to an individual infiltration area is 5 acres or less.
(5) Use of an infiltration is by permission of the City Engineer only.
(6) Coordination with the City Engineer to determine the capacity (size).
(7) Each infiltration area must have a positive overflow route.

MAINTENANCE:

WEEKLY
(1) Remove trash or debris

QUARTERLY
(1) Check the positive overflow

ANNUALLY
(1) Remove sediment, replace grass as necessary

POST–CONSTRUCTION
BEST MANAGEMENT PRACTICES

CITY
OF
EULESS

COE–PC–BMP–4 4/10

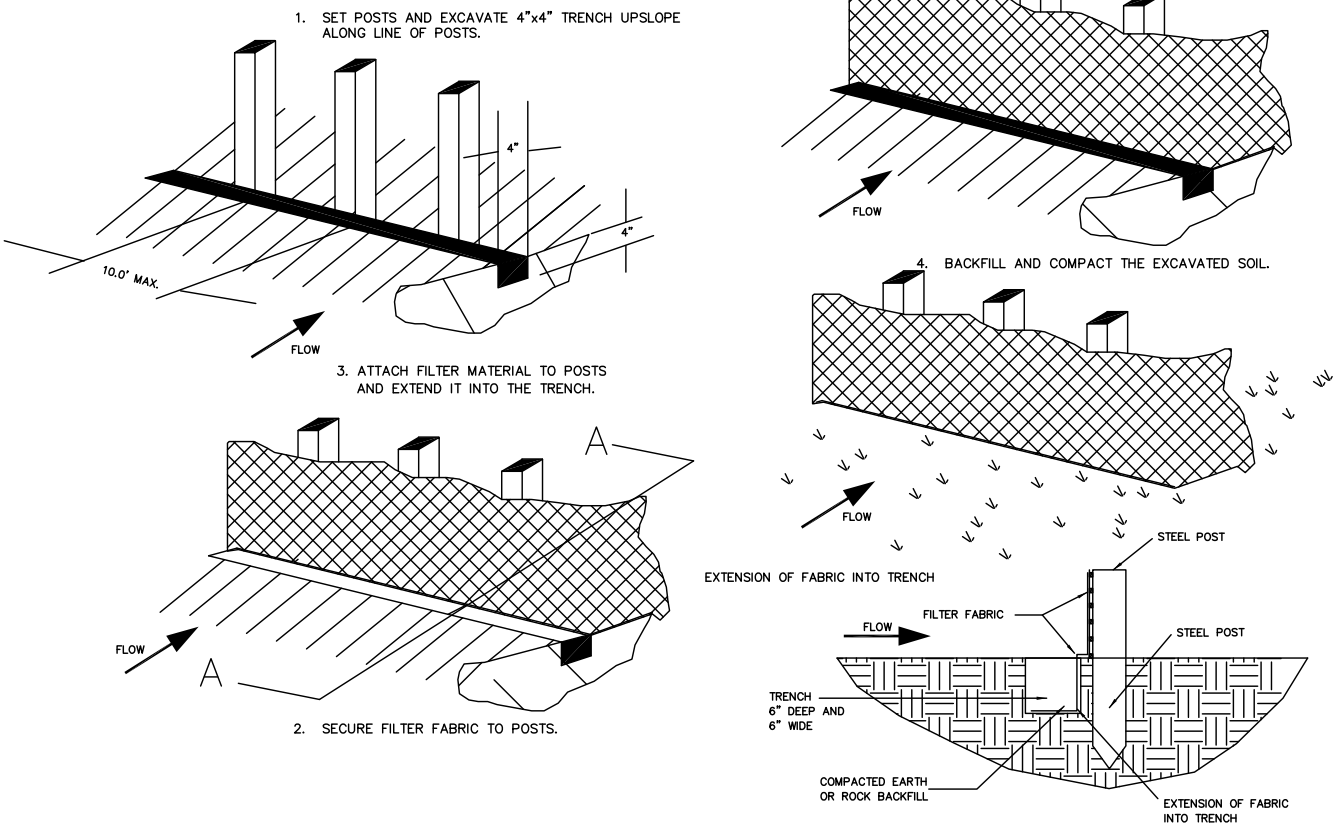

SECTION A-A

SILT FENCE CONSTRUCTION
NO STD. SCALE

EROSION CONTROL NOTES

1. ALL CONTRACTORS WILL COMPLY WITH THE REQUIREMENTS AND INTENT OF THE NPDES GENERAL PERMIT FOR STORM WATER DISCHARGES.
2. EACH CONTRACTOR SHALL SUBMIT A NOTICE OF INTENT (NOI) FOR STORM WATER DISCHARGE PERMIT COVERAGE. THIS SUBMITTAL SHALL BE COORDINATED WITH THE ENGINEER AND SHALL OCCUR NO LESS THAN 48 HOURS PRIOR TO THE COMMENCEMENT OF ANY CONSTRUCTION ACTIVITY.
3. EACH CONTRACTOR SHALL OBTAIN AND SUBMIT TO OWNER/ENGINEER A POLLUTION PREVENTION CERTIFICATION FROM EACH SUB-CONTRACTOR WHOSE WORK IMPACTS THE STORM WATER POLLUTION PREVENTION PLAN (SWPPP) PRIOR TO THE PERFORMANCE OF ANY WORK BY SAID SUB-CONTRACTOR. THESE CERTIFICATIONS SHALL BECOME A PART OF THE STORM WATER POLLUTION PREVENTION PLAN.
4. CONTRACTOR SHALL INSTALL EROSION CONTROL MEASURES, AS INDICATED ON THE PLANS AND AS FIELD CONDITIONS WARRANT, PRIOR TO COMMENCING ANY CONSTRUCTION ACTIVITY. REPAIRS OR MODIFICATIONS TO THE MEASURES WILL BE MADE BY THE CONTRACTOR IF THE CONTROL MEASURES PROVE INEFFECTIVE OR IF ADDITIONAL CONTROL MEASURES ARE NECESSARY.
5. AT A MINIMUM, PERIMETER CONTROLS SUCH AS SILT FENCE OR STRAW BALES SHALL BE INSTALLED AT ALL DOWN SLOPE BOUNDARIES AND AS WARRANTED WHERE PAVEMENT REMOVAL, UTILITY CONSTRUCTION, GRADING, OR OTHER CONSTRUCTION ACTIVITIES ARE TO BE PERFORMED. THE CONTRACTOR SHALL AT ALL TIMES TAKE SUCH MEASURES AS NECESSARY TO MINIMIZE OFF SITE TRACKING OR TRANSPORT OF SEDIMENT AND DEBRIS.
6. DAMAGES TO ADJACENT PROPERTY OR TO RECEIVING WATERS CAUSED BY IMPROPERLY INSTALLED OR POORLY MAINTAINED EROSION CONTROL MEASURES ARE THE RESPONSIBILITY OF THE CONTRACTOR.
7. THE CONTRACTOR SHALL BE RESPONSIBLE FOR THE REMOVAL AND DISPOSAL OF ANY SILTATION CAUSED BY HIS OPERATIONS AND/OR FAILURE OF THE EROSION CONTROL MEASURES.
8. CONTRACTOR SHALL REMOVE AND PROPERLY DISPOSE OF ACCUMULATED SILT AND SEDIMENT FROM EROSION CONTROL MEASURES WHEN IT REACHES A DEPTH OF SIX (6) INCHES OR IMPAIRS THE EFFECTIVENESS OF THE MEASURES.
9. THE OWNER'S REPRESENTATIVE WILL INSPECT THE PROJECT AT A MINIMUM OF EVERY SEVEN DAYS AND AFTER EVERY RAINFALL OF 0.5 INCHES OR GREATER TO DETERMINE THE INTEGRITY AND EFFECTIVENESS OF THE EROSION CONTROL MEASURES. A WRITTEN INSPECTION REPORT WILL BE FILED WITH THE POLLUTION PREVENTION PLAN. THIS INSPECTION DOES NOT RELIEVE THE CONTRACTOR'S RESPONSIBILITY FOR INSPECTION AND MAINTENANCE OF THE EROSION CONTROL MEASURES OR HIS DUTY TO COMPLY WITH THE INTENT AND CONDITIONS OF THE NPDES GENERAL PERMIT.
10. INLET PROTECTION: THE CONTRACTOR SHALL PROVIDE ADEQUATE PROTECTION OF STORM DRAIN INLETS USING STRAW BALE CHECKS OR OTHER MEASURES AS SPECIFIED. WHERE INLETS ARE BEING INSTALLED, THE CONTRACTOR SHALL PREVENT MATERIALS FROM ENTERING THE STORM DRAIN SYSTEM.
11. ALL STOCKPILED SOILS WILL BE SURROUNDED BY A STRAW BALE DIKE, SILT FENCE, SEDIMENT CONTROL SWALE, OR EQUIVALENT MEASURE, AS APPROVED BY ENGINEER, TO PROPERLY CONTROL SEDIMENT RUNOFF.
12. STABILIZATION – THE CONTRACTOR SHALL STABILIZE ANY AREA WHERE CONSTRUCTION ACTIVITY IS TO BE TEMPORARILY OR PERMANENTLY CEASED FOR MORE THAN 14 DAYS.
13. AREAS SHOWN "TO REMAIN NATURAL" ARE NOT TO BE DISTURBED BY ANY CONSTRUCTION OPERATIONS WITHOUT PRIOR CONSENT OF THE ENGINEER. THESE AREAS WILL SERVE AS NATURAL FILTER STRIPS.
14. ALL EROSION CONTROL MEASURES SHALL REMAIN IN PLACE UNTIL ADEQUATE GROUND COVER IS ESTABLISHED TO PREVENT SILTATION OF DOWNSTREAM WATERWAYS.
15. CURLEX BLANKET OR APPROVED EQUIVALENT WILL BE PLACED BETWEEN THE BACK OF ALL CONCRETE CURBS, EXISTING AND NEW, AND THE PROPOSED SIDEWALK.

S.W.P.P.P.

CITY OF EULESS

COE-SWPPP-1 1/16

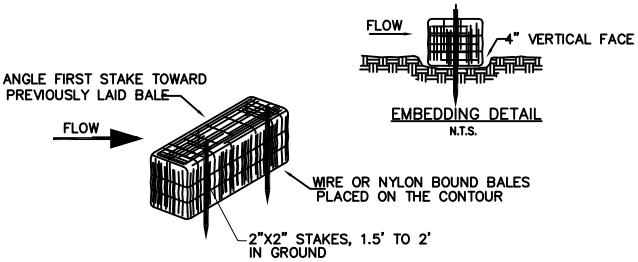

ANCHORING DETAIL

NO STD. SCALE

CONSTRUCTION NOTES – HAYBALES

1. BALES SHALL BE PLACED IN A ROW WITH ENDS TIGHTLY ABUTTING THE ADJACENT BALES.
2. EACH BALE SHALL BE EMBEDDED IN THE SOIL A MINIMUM OF 4" WHERE POSSIBLE.
3. BALES SHALL BE SECURELY ANCHORED IN PLACE BY STAKES OR RE–BARS DRIVEN THROUGH THE BALES. THE FIRST STAKE IN EACH BALE SHALL BE ANGLED TOWARD PREVIOUSLY LAID BALE TO FORCE BALES TOGETHER.
4. INSPECTION SHALL BE FREQUENT AND REPAIR OR REPLACEMENT SHALL BE MADE PROMPTLY AS NEEDED BY CONTRACTOR.
5. ON CURB INLETS, AFTER PAVING HAS BEEN COMPLETED PLACE HAY BALES ALONG THROAT OF INLET TO KEEP TRASH & SILT FROM ENTERING INLET.
6. BALES SHALL BE REMOVED WHEN THEY HAVE SERVED THEIR USEFULNESS SO AS NOT TO BLOCK OR IMPEDE STORM FLOW OR DRAINAGE.
7. ACCUMULATED SILT SHALL BE REMOVED WHEN IT REACHES A DEPTH OF SIX INCHES.

TEMPORARY HAY BALE BARRIER DETAIL

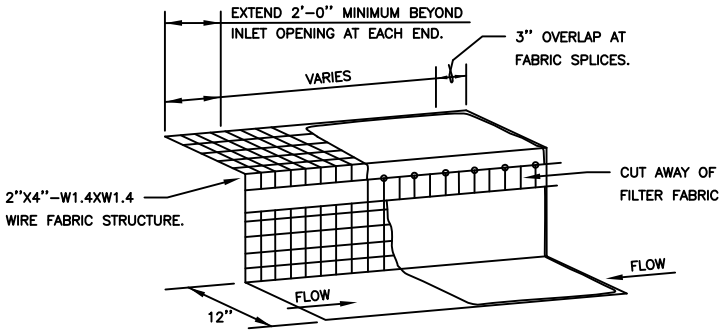

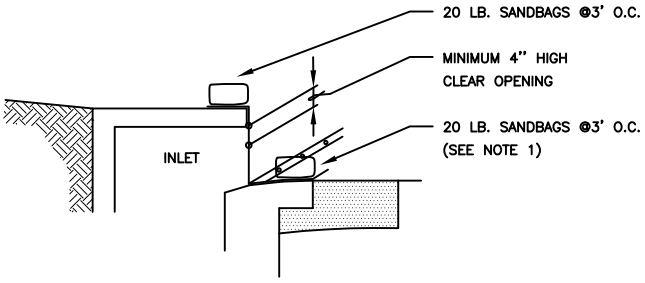

CURB INLET PROTECTION

NO STD. SCALE

NOTES:

1. WHERE MINIMUM CLEARANCES CAUSE TRAFFIC TO DRIVE IN THE GUTTER, THE CONTRACTOR MAY SUBSTITUTE A 1" X 4" BOARD SECURED WITH CONCRETE NAILS 3' O.C. NAILED INTO THE GUTTER IN LIEU OF SANDBAGS TO HOLD THE FILTER DIKE IN PLACE. UPON REMOVAL, CLEAN ANY DIRT/DEBRIS FROM NAILING LOCATIONS, APPLY CHEMICAL SANDING AGENT AND APPLY NON–SHRINK GROUT FLUSH WITH SURFACE OF GUTTER.
2. A SECTION OF FILTER FABRIC SHALL BE REMOVED AS SHOWN ON THIS DETAIL OR AS DIRECTED BY THE ENGINEER OR DESIGNATED REPRESENTATIVE. FABRIC MUST BE SECURED TO WIRE BACKING WITH CLIPS OR HOG RINGS AT THIS LOCATION.
3. DAILY INSPECTION SHALL BE MADE BY THE CONTRACTOR AND SILT ACCUMULATION MUST BE REMOVED WHEN DEPTH REACHES 2".
4. CONTRACTOR SHALL MONITOR THE PERFORMANCE OF INLET PROTECTION DURING EACH RAINFALL EVENT AND IMMEDIATELY REMOVE THE INLET PROTECTIONS IF THE STORM–WATER BEGINS TO OVERTOP THE CURB.
5. INLET PROTECTIONS SHALL BE REMOVED AS SOON AS THE SOURCE OF SEDIMENT IS STABILIZED.
6. ALTERNATIVE INLET PROTECTION MUST BE APPROVED BY THE CITY ENGINEER.

S.W.P.P.P.

CITY OF EULESS

COE–SWPPP–2 03/10

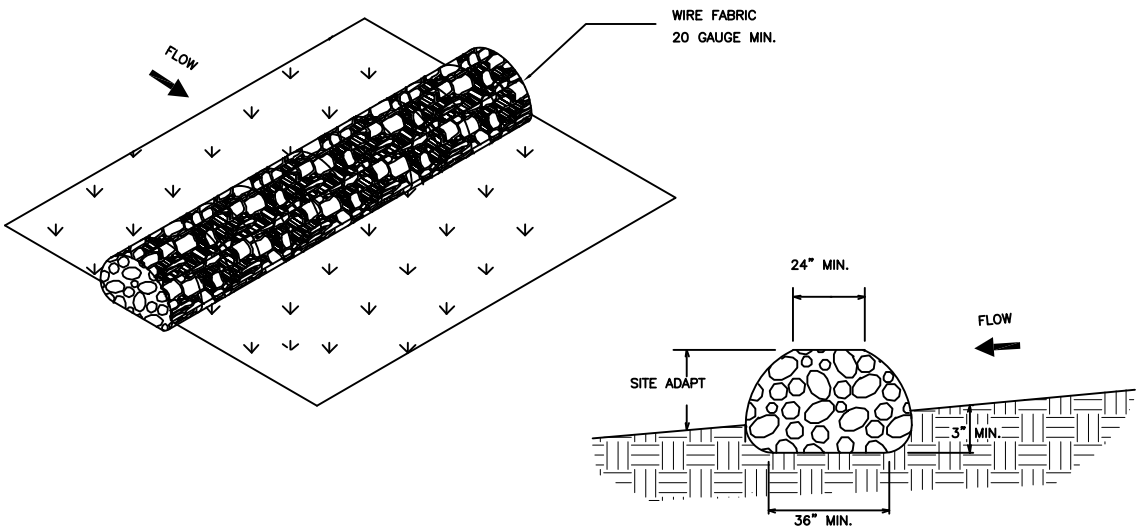

NOTES:

1. USE OPEN GRADED ROCK 4–8 INCH DIAMETER FOR STREAM FLOW CONDITIONS. USE OPEN GRADED ROCK 3–5 INCH DIAMTETER FOR OTHER CONDITIONS.
2. THE ROCK BERM SHALL BE SECURED WITH A WOVEN WIRE SHEATHING HAVING MAXIMUM 1 INCH OPENING AND MINIMUMWIRE DIAMETER OF 20 GAUGE.
3. CONTRACTOR SHALL REMOVE AND DISPOSE OF SEDIMENT WHEN IT ACCUMULATES TO ONE–THIRD THE HEIGHT OF THE BERM
4. ROCK BERMS MAY BE INSTALLED IN STEEPLY SLOPED SWALES, OR IN SWALES WHERE ADEQUATE VEGETATION CANNOT BE ESTABLISHED, ROCK BERMS SHOULD NOT BE PLACE IN STREAMS.
5. ROCK BERMS SHALL BE SPACED SO THAT THE TOE OF THE UPSTREAM ROCK BERM IS AT THE SAME ELEVATION AS THE TOP OF HE DOWNSTREAM ROCK BERM.
6. CONTRACTOR SHALL INSPECT ROCK BERMS FOR SEDIMENT AND DEBRIS ACCUMULATION AFTER EACH SIGNIFICANT RAINFALL.

ROCK BERM

NO STD SCALE

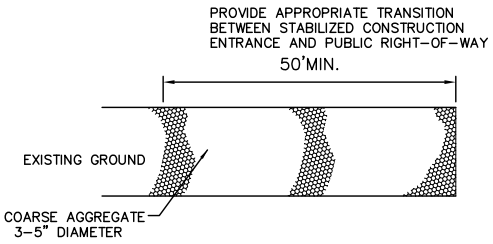

PLAN VIEW

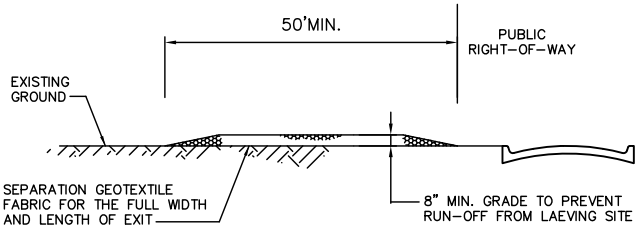

PROFILE

STABILIZED CONSTRUCTION NOTES

1. LENGTH SHALL BE SHOWN ON THE CONSTRUCTION DRAWINGS, BUT NOT LESS THAN 50 FEET.
2. THICKNESS SHALL NOT BE LESS THAN 8 INCHES.
3. WIDTH SHALL NOT BE LESS THAN FULL WIDTH OF ALL POINTS OF INGRESS OR EGRESS.
4. STABILIZATION FOR OTHER AREAS SHALL HAVE THE SAME AGGREGATE THICKNESS AND WIDTH REQUIREMENTS AS THE STABILIZED CONSTRUCTION EXIT, UNLESS OTHERWISE SHOWN ON THE CONSTRUCTION DRAWINGS.
5. STABILIZED AREA MAY BE WIDER OR LONGER TO ACCOMMODATE A TRUCK WASHING AREA, WHEN SHOWN ON THE CONSTRUCTION DRAWING. AN OUTLET SEDIMENT TRAP MUST BE PROVIDED FOR THE TRUCK WASHING AREA.
6. CONTRACTOR SHALL BE RESPONSIBLE FOR PROCURING THE NOI AS REQUIRED.

STABILIZED CONSTRUCTION ENTRANCE

NO STD SCALE

S.W.P.P.P.

CITY
OF
EULESS

COE–SWPPP–3

03/10