©2013 Westwood Professional Services, Inc.

PLAT - GATEWAY COURT

Note:
CONVERGENCE ANGLE: +00°46'023.25"
SCALE FACTOR: 0.999877032903

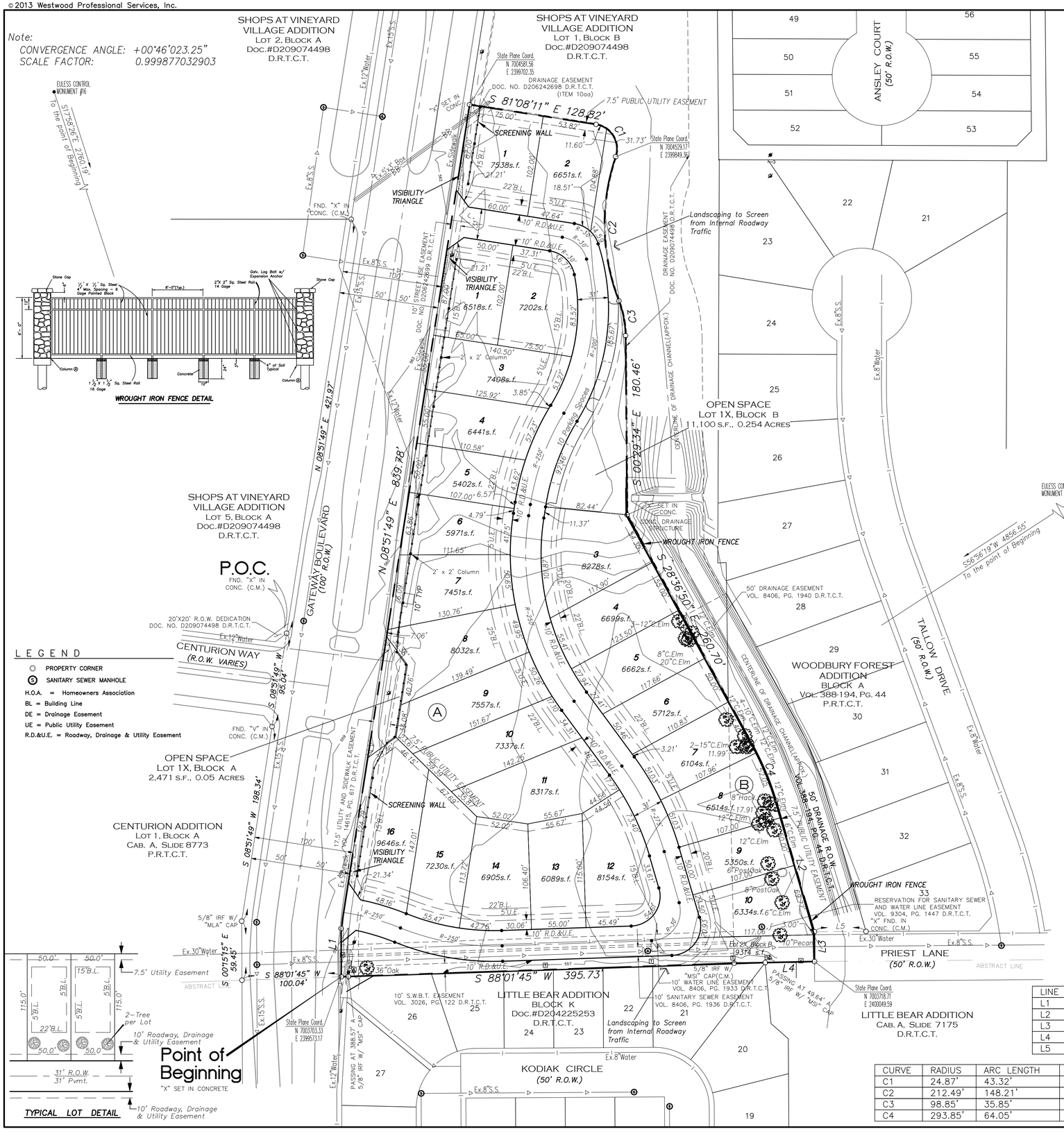

LEGEND

- PROPERTY CORNER
- SANITARY SEWER MANHOLE
- H.O.A. = Homeowners Association
- BL = Building Line
- DE = Drainage Easement
- UE = Public Utility Easement
- R.D.&U.E. = Roadway, Drainage & Utility Easement

METES AND BOUNDS DESCRIPTION

All that certain 5.588 acres of land, which is out of the 32.031 acre tract described in the deed to Univest Properties, Inc., Trustee, recorded in Volume 11695, Page 1059, in the Deed Records of Tarrant County, Texas, and all of the 0.309 acre tract, described in the deed to Univest Properties Inc., Trustee, recorded in Document Number D208099616, in the Deed Records of Tarrant County, Texas, in the B. Harrison Survey, A-808, in the City of Euless, Tarrant County, Texas and more particularly described by metes and bounds as follows: (all bearings shown hereon are based on the west right-of-way line of Gateway Boulevard(100' right-of-way), called South 08° 51' 49" West, as shown on the plat of the Shops at Vineyard Village Addition, recorded in Document Number D209074498, in the Deed Records of Tarrant County, Texas);

Commencing at an "X" cut in concrete found for the north corner of the northwest 10' x 10' corner clip at the intersection of Centurion Way (right-of-way varies) and said Gateway Boulevard, from which an "X" in concrete found for the northeast corner of Lot 5, Block A, of said Shops at Vineyard Village Addition, bears North 08° 51' 49" East – 421.97; Then South 08° 51' 49" West along said west right-of-way line of Gateway Boulevard, passing at a distance of 95.04' a "V" cut in concrete found for the south corner of the southwest corner clip at the intersection of said Centurion Way and said Gateway Boulevard, continuing along the west line of Gateway Boulevard, common to the east line of Lot 1, Block A, Centurion Addition, recorded in Cabinet A, Slide 8773, in the Plat Records of Tarrant County, Texas, for a total distance of 293.38 to a 5/8" iron rod with a cap stamped "MLA" found for an angle corner of said Lot 1, Block A, Centurion Addition; Then South 00° 15' 15" West – 59.45', continuing along the west line of said Gateway Boulevard common to the east line of said Lot 1, Block A, Centurion Addition, Then South 08° 01' 45" West 100.04' to an "X" in concrete set for the POINT OF BEGINNING and southwest corner of the herein described tract, in the east right-of-way line of said Gateway Boulevard and in the south line of said 32.031 acre tract;

THENCE along the said east right-of-way line of Gateway Boulevard the following courses:

North 0° 15' 15" West – 48.48' to a 1/2" iron rod with a cap stamped "SPRY" set for an angle corner of the herein described tract;

North 08° 51' 49" East – 839.78' to an "X" in concrete set for the northwest corner of the herein described tract, common to the most westerly southwest corner of Lot 1, Block B, of said Shops at Vineyard Village Addition;

THENCE along the south and west lines of said Lot 1, Block B the following courses:

South 81° 08' 11" East – 128.82' to a 1/2" iron rod with a cap stamped "SPRY" set for the Point of Curvature of a curve to the right having a central angle of 99° 48' 36", a radius of 24.87', and a chord bearing and distance of South 31° 13' 16" East – 38.05';

Along said curve to the right, an arc distance of 43.32' to a 1/2" iron rod with a cap stamped "SPRY" set for the Point of Reverse Curvature of a curve to the right having a central angle of 39° 57' 44", a radius of 212.49', and a chord bearing and distance of South 01° 17' 26" East – 145.22';

Along said curve to the right, an arc distance of 148.21' to a 1/2" iron rod with a cap stamped "SPRY" set for the Point of Reverse Curvature of a curve to the right having a central angle of 20° 46' 38", a radius of 98.85', and a chord bearing and distance of South 10° 52' 57" East – 35.65';

Along said curve to the right an arc distance of 35.85' to a 1/2" iron rod with a cap stamped "SPRY" set for the end of curve;

South 00° 29' 34" East – 180.46' to an "X" in concrete set for an angle corner of the herein described tract;

South 28° 36' 50" East passing at a distance of 212.71' the south corner of said Lot 1, Block B, Shops at Vineyard Village Addition, common to the north corner of said 0.309 acre tract, continuing for a total distance of 260.70' to a 1/2" iron rod with a cap stamped "SPRY" set for a point on a curve to the right having a central angle of 12° 29' 16", a radius of 293.85', and a chord bearing and distance of South 23° 08' 35" East – 63.92';

THENCE along said curve to the right an arc distance of 64.05' to a 1/2" iron rod with a cap stamped "SPRY" set for the end of curve;

THENCE South 16° 15' 45" East – 137.68' to a 1/2" iron rod with a cap stamped "SPRY" set for a point of corner of the herein described tract, in the north right-of-way line of Priest Lane (50' R.O.W., from which an "X" in concrete found for the southwest corner of Lot 33, Block A, Woodbury Forest Addition, recorded in Volume 388-194, Page 44 in the Plat Records of Tarrant County, Texas bears North 89° 43' 00" East – 52.01';

THENCE South 00° 17' 00" East – 30.00' along the west terminus of Priest Lane, to a 1/2" iron rod with a cap stamped "SPRY" set for the southeast corner of the herein described tract, common to the southeast corner of said 0.309 acre tract, in a north line of Parcel A, Little Bear Addition, recorded in Cabinet A, Slide 7175, in the Plat Records of Tarrant County, Texas ;

THENCE South 88° 44' 34" West along the south line of said 0.309 acre tract, common to the north line of said Parcel A, Little Bear Addition, passing at a distance of 49.64' a 5/8" iron rod with a cap stamped "MSI" found for the northwest corner of said Parcel A, common to the northeast corner of the Little Bear Addition, recorded in Document Number D204225253, in the Deed Records of Tarrant County, Texas, continuing for a total distance of 80.94' to a 5/8" iron rod with a cap stamped "MSI" found for the southwest corner of said 0.309 acre tract;

THENCE South 88° 01' 45" West along the south line of said 32.031 acre tract, common to the north line of said Little Bear Addition (D204225253), passing at a distance of 388.57' a 5/8" iron rod with a cap stamped "MSI" found for the northwest corner of said Little Bear Addition, continuing along the south line of said 32.031 acre tract for a total distance of 395.73' to the POINT OF BEGINNING and containing 5.588 Acres of land

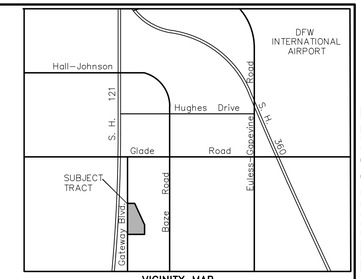

VICINITY MAP
NOT TO SCALE

SITE SUMMARY

Land Area: 243,413 Sq. Ft. or 5.588 Acres

Single Family Lots 26
All development shall be in conformance with all R-1L district requirements and permitted uses except as noted in special conditions.

SPECIAL CONDITIONS:

1. *The minimum lot area shall be 5,300 square feet*
2. *The maximum lot coverage shall be 60 percent.*
3. *No Alleys shall be required.*
4. *No interior sidewalks shall be required.*
5. *All lots to have full sprinkler, and full sod.*
6. *Should the project not be developed as a single family subdivision the assisted living land use will remain in place.*

Minimum Area Regulations:

Main Building 1,700 sf(Living Area)

Setbacks

FY 22' Minimum

FY 20' for Lots 3,8,9 & 10 Block B
22' Minimum Garage Setback

SY 5' Minimum
15' Adjacent to a side street

RY 15' Minimum

Average Lot Area 6,980 sf

GRAPHIC SCALE 1"=50'
50 0 50 100

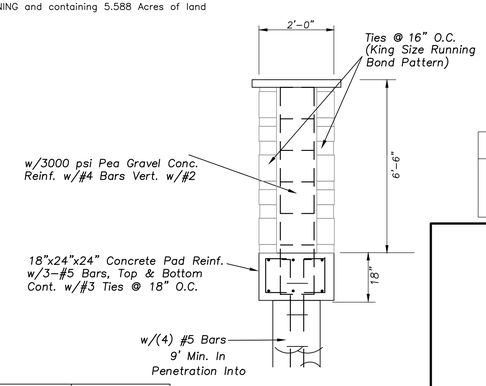

2'X2' STONE COLUMN DETAIL

LINE	BEARING	DISTANCE
L1	N 00°15'15" W	48.48'
L2	S 16°15'45" E	137.68'
L3	S 00°17'00" E	30.00'
L4	S 88°44'34" W	80.94'
L5	N 89°43'00" E	52.01'

CURVE	RADIUS	ARC LENGTH	CHORD LENGTH	CHORD BEARING	DELTA ANGLE
C1	24.87'	43.32'	38.05'	S 31°13'16" E	99°48'36"
C2	212.49'	148.21'	145.22'	S 01°17'26" E	39°57'44"
C3	98.85'	35.85'	35.65'	S 10°52'57" E	20°46'38"
C4	293.85'	64.05'	63.92'	S 23°08'35" E	12°29'16"

CITY APPROVAL

13-01-PD
PLANNED DEVELOPMENT EXHIBIT
OF
GATEWAY COURT

IN THE
CITY OF EULESS, TARRANT COUNTY, TEXAS
5.588 ACRES
26 RESIDENTIAL LOTS
3 H.O.A. OPEN SPACE LOT

OWNER/DEVELOPER: BLOOMFIELD HOMES
1050 E. Highway 114 Suite 210
Southlake, TX 76092
TEL: 817-416-1572

ENGINEER/SURVEYOR:
TIPTON ENGINEERING
a division of Westwood
5605 North MacArthur Blvd.,
Suite 500 Irving, Texas 75038
(972) 226-2967
Firm No. F-11756

SEPTEMBER, 2013