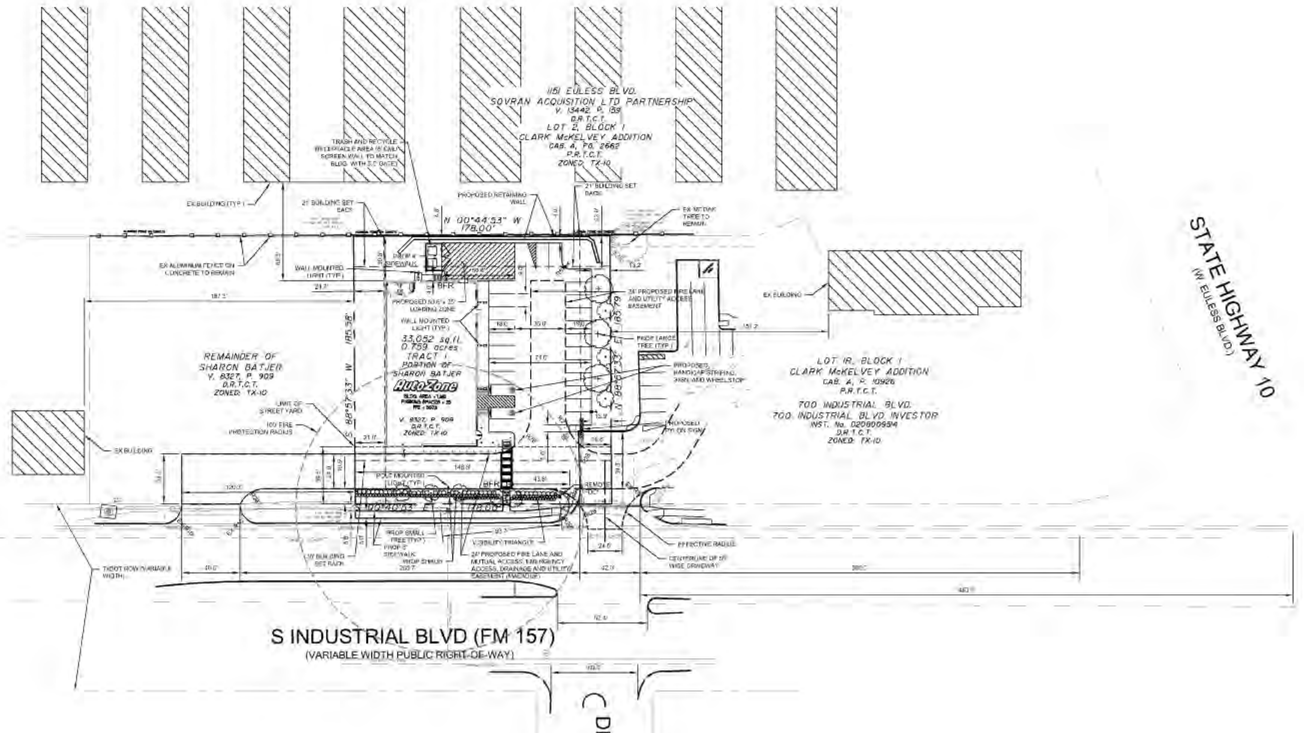

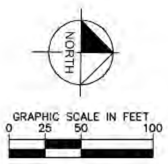

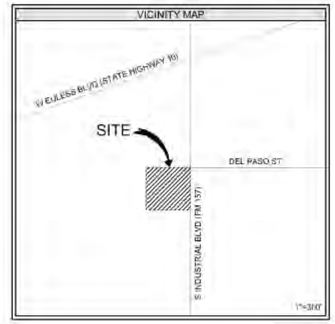

CITY OF EULESS LANDSCAPE CODE		
	REQUIRED	PROVIDED
TX-10 LANDSCAPE REQUIREMENTS:		
10' Landscape Strip - 1 Tree per 25 LF of Frontage 4 Shrubs per 25 LF of Frontage	Yes 6 Trees 25 Shrubs	Yes 5 Small Trees* 141 Shrubs
Parking Lanscaping - 25 SF of Landscape Area per space 1 Tree per 10 parking spaces	625 SF 3 Trees	439 SF** 3 Trees
Screen Meters and Utilities	Yes	Yes
ART. VII LANDSCAPE REQUIREMENTS:		
15% of this Street Yard shall be Landscape Area (7,031 SF * 0.15 = 1,054 SF)	1,054 SF	1,561 SF
1 Tree per 1,000 SF 1 Shrub per 50 SF 10% Groundcover	7 Tree 141 Shrubs 703 SF	3 Large Trees + 8 Small Trees* 141 Shrubs 703 SF
Parking Lot Landscaping - on Street Yard 93 SF per 12 spaces Non Street Yard 60 SF per 12 spaces	0 SF 125 SF	0 SF 272 SF

NOTES:
*OVERHEAD AND UNDERGROUND UTILITIES PREVENT THE PLACEMENT OF ALL STREET TREES ALONG THE FRONTAGE. SMALL TREES USED IN LIEU OF LARGE STREET TREES. SMALL TREES COUNT 2:1.
**THE PARKING LOT LANDSCAPE AREA IS PLANTED TO ITS FULL POTENTIAL. AMPLE SIDE YARD AND LESS PARKING SPACES HELP TO SATISFY THE INTENT OF THIS REQUIREMENT.

UNDERGROUND IRRIGATION SYSTEM PLANS DESIGNED BY A LICENSED IRRIGATOR WILL BE SUBMITTED WITH THE BUILDING PERMIT APPLICATION.

	TRACT 1
General Site Data Table	
ITEM	
Zoning (from zoning map)	TX-10 - Texas Highway 10 multi-use district
Land Use	Commercial
Lot Area (square feet/acres/# of lots/# of dwelling units)	33,052 SF / 0.759 AC / 1 / 1
Building Footprint Area (square feet)	7,382 SF
Total Building Area (square feet)	7,382 SF
Building Height (# stories)	1 STORY
Building Height (feet - distance to tallest building element)	21 FT
Percent Impervious (percent/XX.X%)	75.8%
Floor Area Ratio (ratio-X.XX:1)	0.22:1
Building Set Back (from/side/rear: side and rear equal building height)	30 FT / 21 FT / 21 FT
Street Yard Area (area from FM157 frontage property line to face of building)	6,230 SF
Maximum Lot Coverage (from zoning ordinance) (Max. / Provided)	28,094 SF / 25,064 SF
Maximum Building Height (from zoning ordinance) (Max. / Provided)	60 FT / 21 FT
Minimum Lot Area (from zoning ordinance) (Min. / Provided)	22,500 SF / 33,052 SF
Minimum Lot Width (from zoning ordinance) (Min. / Provided)	130 FT / 178 FT
Parking	
Parking Ratio (from zoning ordinance)	1 SPACE / 200 SF (RETAIL) 1 SPACE / 1,000 SF (STORAGE)
Required Parking (# spaces)	21 SPACES
Provided Parking (# spaces)	35 SPACES
Accessible Parking Required (# spaces)	2 SPACES
Accessible Parking Provided (# spaces)	2 SPACES
Landscape Area	
Reference "City of Euless Landscape Code" Table:	
Free Standing Sign Information	
Pylon Sign Height (feet)	30 FT
Pylon Sign Area (square feet)	100 SF

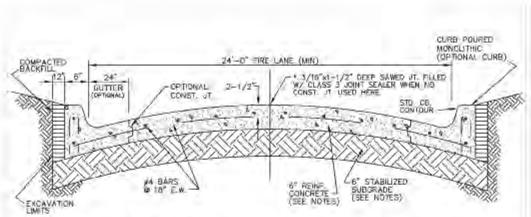

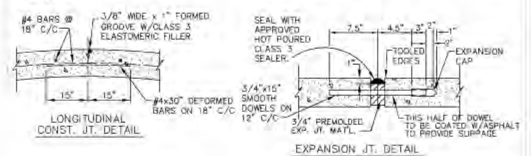

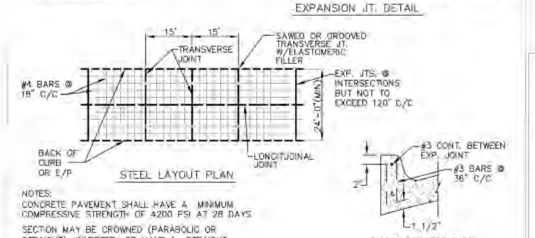

NOTES:
CONCRETE PAVEMENT SHALL HAVE A MINIMUM COMPRESSIVE STRENGTH OF 4,000 PSI AT 28 DAYS.

SECTION MAY BE CROWNED (PARABOLIC OR STRAIGHT); INVERTED; OR HAVE A STRAIGHT CROSS SLOPE. MAXIMUM CROSS SLOPE IS 6%. MAXIMUM LONGITUDINAL GRADE IS 6%.

MIN. OF 30 LBS/S.Y. LIME OR CEMENT REQUIRED FOR SUB-GRADE STABILIZATION. COMPACTION TO 95% STANDARD STANDARD PROCTOR DENSITY, AND HAVE A MOISTURE CONTENT FROM 0% TO +4% ABOVE OPTIMUM MOISTURE.

EMERGENCY ACCESS AND FIRE LANE EASEMENT TYPICAL PAVEMENT SECTION

CITY OF EULESS

COE-FL 11/04

CONCEPT PLANT SCHEDULE

TREES	CODE	QTY	BOTANICAL NAME	COMMON NAME	CONT/CALIPER	SIZE	REMARKS
	LI	6	LAGERSTROEMIA INDICA BRANCING	CRAPE MYRTLE	B & B 3" CAL	6-8' H X 3-4' W	MULTI STEM, 3-STEM MIN., MATCHING, FULL
	QT	3	QUERCUS TEXANA	TEXAS RED OAK	B & B 3" CAL	8'-10' H X 5'-6' W	FULL, STRAIGHT, SINGLE LEADER

SHRUBS	CODE	QTY	BOTANICAL NAME	COMMON NAME	CONT/SPACING	SIZE	REMARKS
	BEB	102	BERBERIS THUNBERGII 'ATROPURPUREA NANA'	DWARF REDLEAF JAPANESE BARBERRY	5 GAL/24" O.C.	12" H X 12" W	MATCHING, FULL BRANCHING
	IDB	38	ILEX CORNUTA 'DWARF BURFORD DWARF'	BURFORD HOLLY	10 GAL/36" O.C.	24" H X 24" W	MATCHING, FULL BRANCHING

NOTE: SPACING AND LOCATION AS SHOWN ON PLAN

NOTES:
1. SITE WILL BE DEVELOPED FOR RETAIL USE, SPECIFICALLY AN AUTOPARTS STORE COMPLIANT WITH TX-10 ZONING.
2. PROPOSED LANDSCAPE WILL BE PROTECTED BY CURBS THROUGHOUT THE PARKING LOT.
3. LANDSCAPING WILL BE INSTALLED AFTER EARTHWORK AND SITE CONSTRUCTION IS COMPLETE. PRIOR TO REMOVAL OF BMPS OUTLINED IN THE EROSION CONTROL PLAN.
4. NOT ALL OF BUILDING IS DESIGNATED AS RETAIL SPACE. TOTAL NUMBER OF PARKING SPACES WAS ADJUSTED TO BE BASED ON THE AMOUNT OF BUILDING IS DESIGNATED FOR RETAIL SPACE AND STORAGE. RETAIL SPACE = 3,288 SF / STORAGE = 3,586 SF.
5. *HOSE-LAY DISTANCE IS MEASURED AT 85.2 FEET FROM EXISTING FIRE HYDRANT TO REMOTE FIRE DOMESTIC CHECK.

SITE PLAN CASE NUMBER: 15-07-SP
AUTOZONE 3641 ADDITION
BLOCK 1, LOTS 1 AND 2
2 LOTS LOCATED ON 1.541 ACRES OF LAND
OUT OF THE
A.M DOWNEN SURVEY, ABSTRACT NO. 415
CITY OF EULESS, TARRENT COUNTY, TEXAS

DATE OF PREPARATION: 10/05/2015

ENGINEER:
BRAD PICKERING, P.E., CFM
KIMLEY-HORN AND ASSOCIATES, INC.
12790 MERIT DRIVE DALLAS, TX 75251
PH: 972-770-1300
FAX: 972-239-3820

ARCHITECT/DEVELOPER:
KEVIN MURPHY
AUTOZONE, INC.
123 S. FRONT STREET 3RD FLOOR
MEMPHIS, TN 38103
PH: 901-495-8771
FAX: 901-495-8300

OWNER:
SHARON BATJER
8932 GARLAND ROAD
DALLAS, TX 75218

DIRECTOR OF PLANNING AND DEVELOPMENT DATE

AUTOZONE, INC
123 South Front Street, 3rd Floor
Memphis, Tennessee 38103
TEL: (901)495-8714 FAX: (901) 495-8424

Prepared For: AutoZone STORE DEVELOPMENT
Store No.: 3641
Industrial Boulevard / FM 157 /
EULESS TX 76040

For Bidding & Contractor Information Contact:
McGraw - Hill Construction Tel: 615-664-1017
www.mcgrawhillconstruction.com

SITE PLAN

REVISIONS
1.
2.
3.
4.

SCALE:

Kimley»Horn
12790 MERIT DRIVE, SUITE 1000
DALLAS, TEXAS 75251
TEXAS FIRM REGISTRATION # 928

DATE
10-05-2015

PROTOTYPE SIZE
7N2-L

1 OF 2

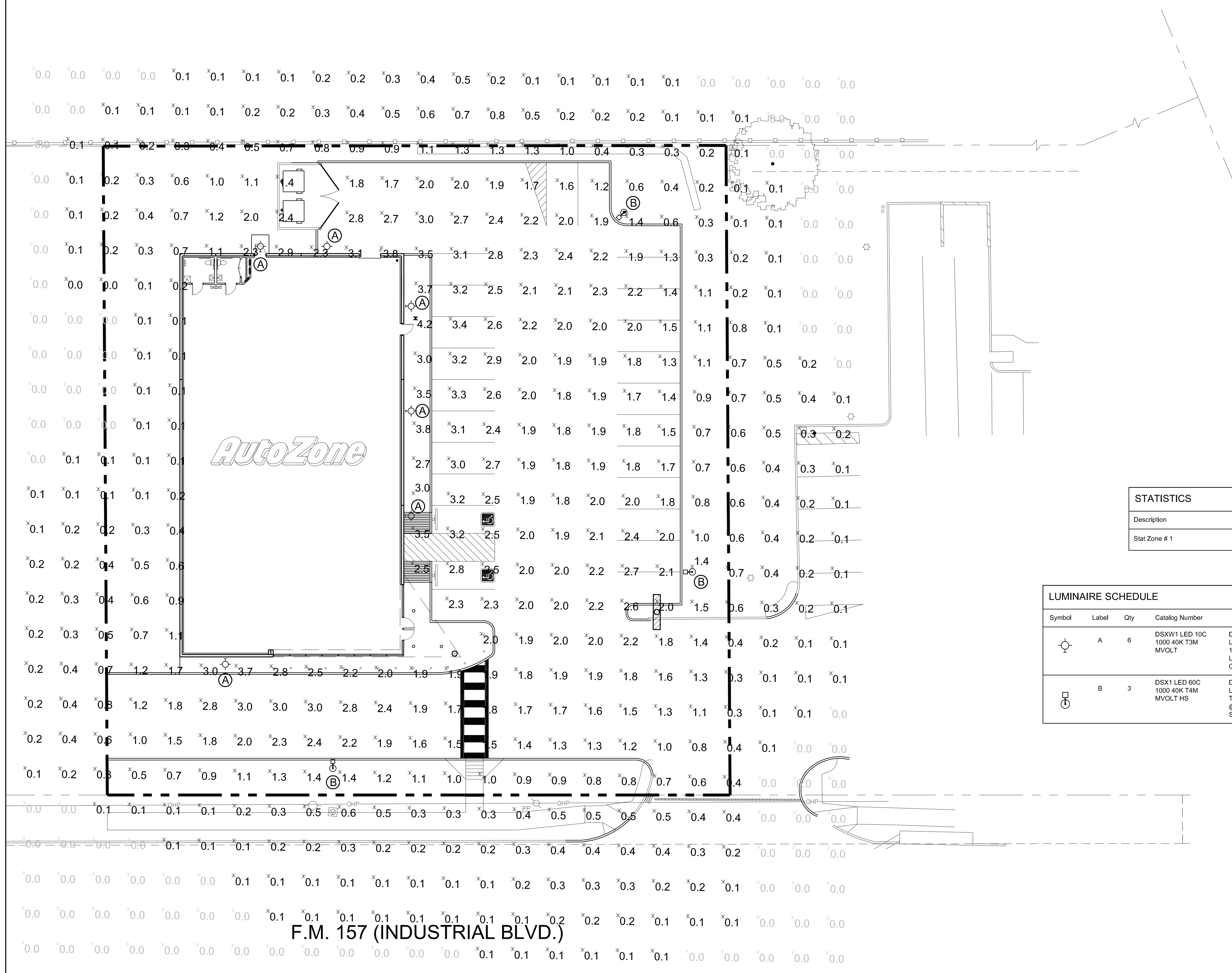

STATISTICS						
Description	Symbol	Avg	Max	Min	Max/Min	Avg/Min
Stat Zone # 1	⁎	1.0 fc	4.2 fc	0.1 fc	42.0:1	10.0:1

LUMINAIRE SCHEDULE

Symbol	Label	Qty	Catalog Number	Description	Lamp	File	Lumens	LLF	Watts
⌖	A	6	DSXW1 LED 10C 1000 40K T3M MVOLT	DSXW1 LED WITH 1 LIGHT ENGINE, 10 LED's, 1000mA DRIVER, 4000K LED, TYPE 3 MEDIUM OPTIC	LED	DSXW1_LED_10C_1000_40K_T3M_MVOLT.ies	Absolute	0.95	40
	B	3	DSX1 LED 60C 1000 40K T4M MVOLT HS	DSX1 LED WITH (2) 30 LED LIGHT ENGINES, TYPE T4M OPTIC, 4000K, @ 1050mA WITH HOUSE SIDE SHIELD	LED	DSX1_LED_60C_1000_40K_T4M_MVOLT_HS.ies	Absolute	0.95	209

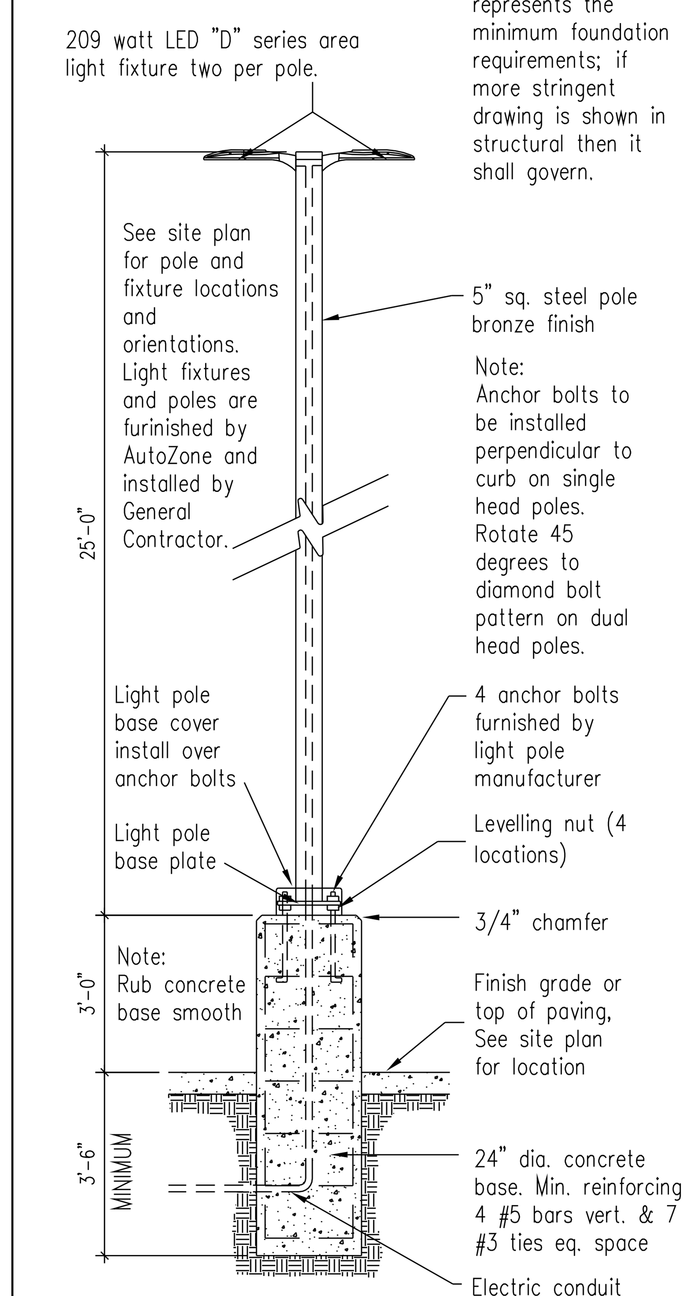

NO SCALE

18' TYPICAL LIGHT POLE

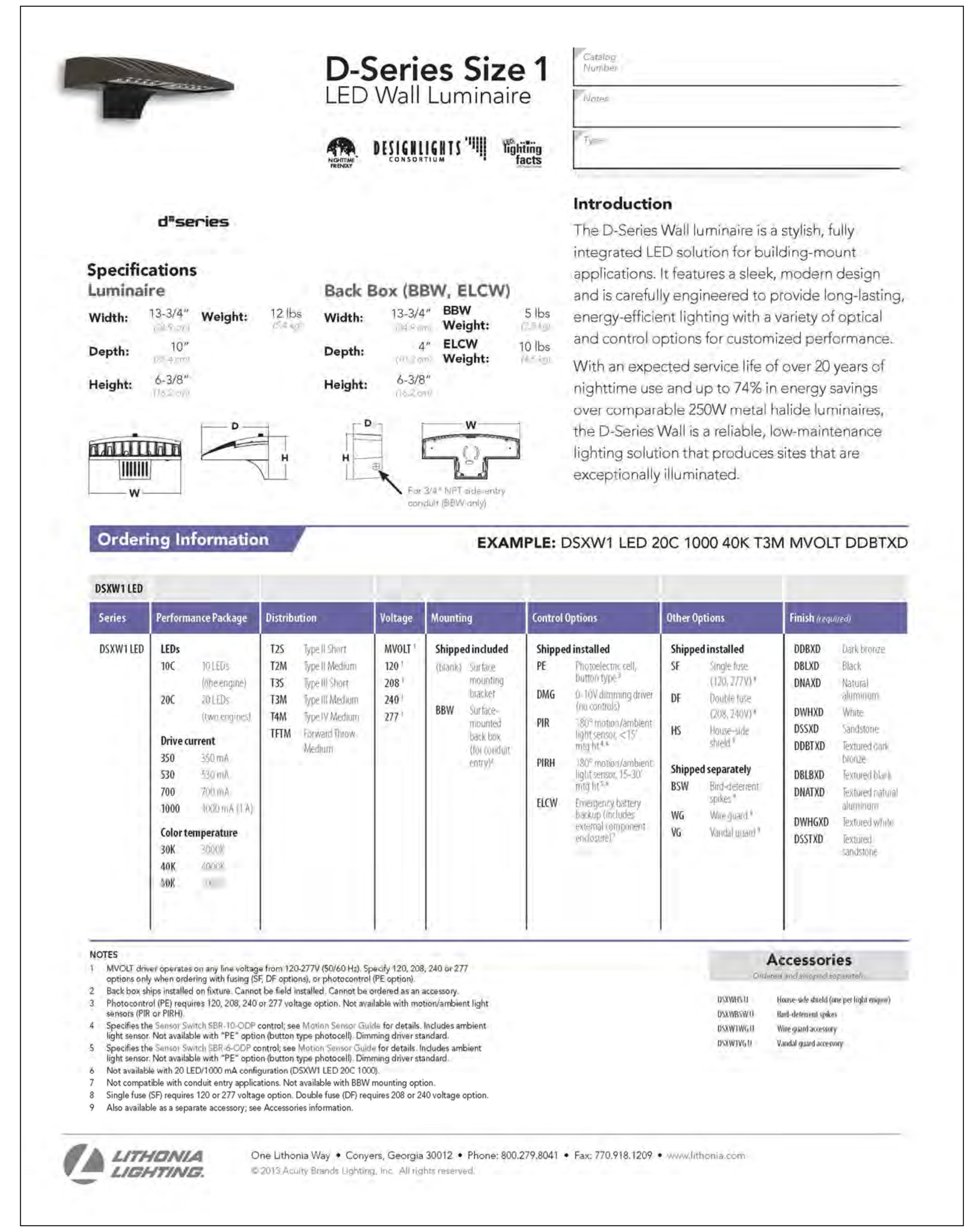

D-Series Size 1
LED Wall Luminaire

Catalog Number
Notes
Type

d"series

Specifications
Luminaire
Width: 13-3/4" (34.9 cm) — Weight: 12 lbs (5.4 kg)
Depth: 10" (25.4 cm)
Height: 6-3/8" (16.2 cm)

Back Box (BBW, ELCW)
Width: 13-3/4" (34.9 cm) — BBW Weight: 5 lbs (2.3 kg)
Depth: 4" (10.2 cm) — ELCW Weight: 10 lbs (4.5 kg)
Height: 6-3/8" (16.2 cm)

For 3/4" NPT side-entry conduit (BBW only)

Introduction
The D-Series Wall luminaire is a stylish, fully integrated LED solution for building-mount applications. It features a sleek, modern design and is carefully engineered to provide long-lasting, energy-efficient lighting with a variety of optical and control options for customized performance.

With an expected service life of over 20 years of nighttime use and up to 74% in energy savings over comparable 250W metal halide luminaires, the D-Series Wall is a reliable, low-maintenance lighting solution that produces sites that are exceptionally illuminated.

Ordering Information
EXAMPLE: DSXW1 LED 20C 1000 40K T3M MVOLT DDBTXD

DSXW1 LED

Series	Performance Package	Distribution	Voltage	Mounting	Control Options	Other Options	Finish (required)
DSXW1 LED	LEDs: 10C 10 LEDs (one engine); 20C 20 LEDs (two engines). Drive current: 350 350 mA; 530 530 mA; 700 700 mA; 1000 1000 mA (1 A). Color temperature: 30K 3000K; 40K 4000K; 50K 5000K	T2S Type II Short; T2M Type II Medium; T3S Type III Short; T3M Type III Medium; T4M Type IV Medium; TFTM Forward Throw Medium	MVOLT[1]; 120[1]; 208[1]; 240[1]; 277[1]	Shipped included: (blank) Surface mounting bracket; BBW Surface-mounted back box (for conduit entry)[2]	Shipped installed: PE Photoelectric cell, button type[3]; DMG 0-10V dimming driver (no controls); PIR 180° motion/ambient light sensor, <15' mtg ht[4,6]; PIRH 180° motion/ambient light sensor, 15-30' mtg ht[5,6]; ELCW Emergency battery backup (includes external component enclosure)[7]	Shipped installed: SF Single fuse (120, 277V)[8]; DF Double fuse (208, 240V)[8]; HS House-side shield[9]. Shipped separately: BSW Bird-deterrent spikes[9]; WG Wire guard[9]; VG Vandal guard[9]	DDBXD Dark bronze; DBLXD Black; DNAXD Natural aluminum; DWHXD White; DSSXD Sandstone; DDBTXD Textured dark bronze; DBLBXD Textured black; DNATXD Textured natural aluminum; DWHGXD Textured white; DSSTXD Textured sandstone

NOTES
1. MVOLT driver operates on any line voltage from 120-277V (50/60 Hz). Specify 120, 208, 240 or 277 options only when ordering with fusing (SF, DF options), or photocontrol (PE option).
2. Back box ships installed on fixture. Cannot be field installed. Cannot be ordered as an accessory.
3. Photocontrol (PE) requires 120, 208, 240 or 277 voltage option. Not available with motion/ambient light sensors (PIR or PIRH).
4. Specifies the Sensor Switch SBR-10-ODP control; see Motion Sensor Guide for details. Includes ambient light sensor. Not available with "PE" option (button type photocell). Dimming driver standard.
5. Specifies the Sensor Switch SBR-6-ODP control; see Motion Sensor Guide for details. Includes ambient light sensor. Not available with "PE" option (button type photocell). Dimming driver standard.
6. Not available with 20 LED/1000 mA configuration (DSXW1 LED 20C 1000).
7. Not compatible with conduit entry applications. Not available with BBW mounting option.
8. Single fuse (SF) requires 120 or 277 voltage option. Double fuse (DF) requires 208 or 240 voltage option.
9. Also available as a separate accessory; see Accessories information.

Accessories
Ordered and shipped separately.

DSXWHS U	House-side shield (one per light engine)
DSXWBSW U	Bird-deterrent spikes
DSXWWG U	Wire guard accessory
DSXWVG U	Vandal guard accessory

LITHONIA LIGHTING.
One Lithonia Way • Conyers, Georgia 30012 • Phone: 800.279.8041 • Fax: 770.918.1209 • www.lithonia.com
© 2013 Acuity Brands Lighting, Inc. All rights reserved.

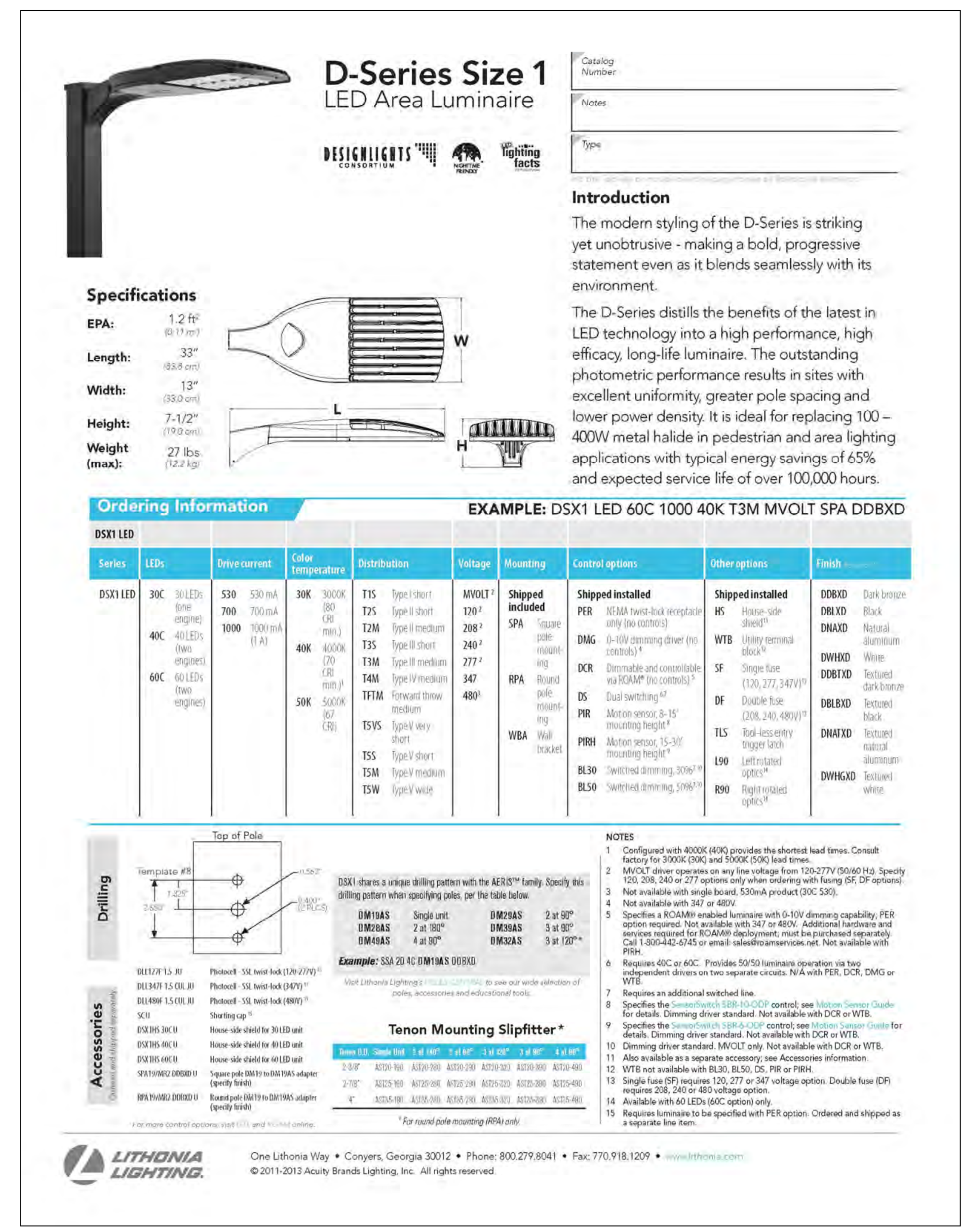

D-Series Size 1
LED Area Luminaire

Catalog Number
Notes
Type

Specifications
EPA: 1.2 ft² (0.11 m²)
Length: 33" (83.8 cm)
Width: 13" (33.0 cm)
Height: 7-1/2" (19.0 cm)
Weight (max): 27 lbs (12.2 kg)

Introduction
The modern styling of the D-Series is striking yet unobtrusive - making a bold, progressive statement even as it blends seamlessly with its environment.

The D-Series distills the benefits of the latest in LED technology into a high performance, high efficacy, long-life luminaire. The outstanding photometric performance results in sites with excellent uniformity, greater pole spacing and lower power density. It is ideal for replacing 100 – 400W metal halide in pedestrian and area lighting applications with typical energy savings of 65% and expected service life of over 100,000 hours.

Ordering Information
EXAMPLE: DSX1 LED 60C 1000 40K T3M MVOLT SPA DDBXD

DSX1 LED

Series	LEDs	Drive current	Color temperature	Distribution	Voltage	Mounting	Control options	Other options	Finish
DSX1 LED	30C 30 LEDs (one engine); 40C 40 LEDs (two engines); 60C 60 LEDs (two engines)	530 530 mA; 700 700 mA; 1000 1000 mA (1 A)	30K 3000K (80 CRI min.); 40K 4000K (70 CRI min.); 50K 5000K (67 CRI)	T1S Type I short; T2S Type II short; T2M Type II medium; T3S Type III short; T3M Type III medium; T4M Type IV medium; TFTM Forward throw medium; T5VS Type V very short; T5S Type V short; T5M Type V medium; T5W Type V wide	MVOLT[2]; 120[2]; 208[2]; 240[2]; 277[2]; 347; 480[3]	Shipped included: SPA Square pole mounting; RPA Round pole mounting; WBA Wall bracket	Shipped installed: PER NEMA twist-lock receptacle only (no controls); DMG 0-10V dimming driver (no controls)[4]; DCR Dimmable and controllable via ROAM® (no controls)[5]; DS Dual switching[6,7]; PIR Motion sensor, 8-15' mounting height[8]; PIRH Motion sensor, 15-30' mounting height[9]; BL30 Switched dimming, 30%[7,10]; BL50 Switched dimming, 50%[7,10]	Shipped installed: HS House-side shield[11]; WTB Utility terminal block[12]; SF Single fuse (120, 277, 347V)[13]; DF Double fuse (208, 240, 480V)[13]; TLS Tool-less entry trigger latch; L90 Left rotated optics[14]; R90 Right rotated optics[14]	DDBXD Dark bronze; DBLXD Black; DNAXD Natural aluminum; DWHXD White; DDBTXD Textured dark bronze; DBLBXD Textured black; DNATXD Textured natural aluminum; DWHGXD Textured white

Drilling — Top of Pole; Template #8

DSX1 shares a unique drilling pattern with the AERIS™ family. Specify this drilling pattern when specifying poles, per the table below.

DM19AS	Single unit	DM29AS	2 at 90°
DM28AS	2 at 180°	DM39AS	3 at 90°
DM49AS	4 at 90°	DM32AS	3 at 120°*

Example: SSA 20 4C DM19AS DDBXD

Visit Lithonia Lighting's POLES CENTRAL to see our wide selection of poles, accessories and educational tools.

Accessories (Ordered and shipped separately)

DLL127F 1.5 JU	Photocell - SSL twist-lock (120-277V)[15]
DLL347F 1.5 CUL JU	Photocell - SSL twist-lock (347V)[15]
DLL480F 1.5 CUL JU	Photocell - SSL twist-lock (480V)[15]
SCU	Shorting cap[15]
DSX1HS 30C U	House-side shield for 30 LED unit
DSX1HS 40C U	House-side shield for 40 LED unit
DSX1HS 60C U	House-side shield for 60 LED unit
SPA19/MR2 DDBXD U	Square pole DM19 to DM19AS adapter (specify finish)
RPA19/MR2 DDBXD U	Round pole DM19 to DM19AS adapter (specify finish)

For more control options, visit DTL and ROAM online.

Tenon Mounting Slipfitter*

Tenon O.D.	Single Unit	2 at 180°	2 at 90°	3 at 120°	3 at 90°	4 at 90°
2-3/8"	AST20-190	AST20-280	AST20-290	AST20-320	AST20-390	AST20-490
2-7/8"	AST25-190	AST25-280	AST25-290	AST25-320	AST25-390	AST25-490
4"	AST35-190	AST35-280	AST35-290	AST35-320	AST35-390	AST35-490

* For round pole mounting (RPA) only.

NOTES
1. Configured with 4000K (40K) provides the shortest lead times. Consult factory for 3000K (30K) and 5000K (50K) lead times.
2. MVOLT driver operates on any line voltage from 120-277V (50/60 Hz). Specify 120, 208, 240 or 277 options only when ordering with fusing (SF, DF options).
3. Not available with single board, 530mA product (30C 530).
4. Not available with 347 or 480V.
5. Specifies a ROAM® enabled luminaire with 0-10V dimming capability; PER option required. Not available with 347 or 480V. Additional hardware and services required for ROAM® deployment; must be purchased separately. Call 1-800-442-6745 or email: sales@roamservices.net. Not available with PIRH.
6. Requires 40C or 60C. Provides 50/50 luminaire operation via two independent drivers on two separate circuits. N/A with PER, DCR, DMG or WTB.
7. Requires an additional switched line.
8. Specifies the SensorSwitch SBR-10-ODP control; see Motion Sensor Guide for details. Dimming driver standard. Not available with DCR or WTB.
9. Specifies the SensorSwitch SBR-6-ODP control; see Motion Sensor Guide for details. Dimming driver standard. Not available with DCR or WTB.
10. Dimming driver standard. MVOLT only. Not available with DCR or WTB.
11. Also available as a separate accessory; see Accessories information.
12. WTB not available with BL30, BL50, DS, PIR or PIRH.
13. Single fuse (SF) requires 120, 277 or 347 voltage option. Double fuse (DF) requires 208, 240 or 480 voltage option.
14. Available with 60 LEDs (60C option) only.
15. Requires luminaire to be specified with PER option. Ordered and shipped as a separate line item.

LITHONIA LIGHTING.
One Lithonia Way • Conyers, Georgia 30012 • Phone: 800.279.8041 • Fax: 770.918.1209 • www.lithonia.com
© 2011-2013 Acuity Brands Lighting, Inc. All rights reserved.

© COPYRIGHT 2009

OWNER:
AutoZone, Inc.
123 S. FRONT STREET, 3rd FLOOR
MEMPHIS, TENNESSEE 38103

PREPARED FOR: **AutoZone** STORE DEVELOPMENT
Store No.: 3641
INDUSTRIAL BLVD.
EULESS TX 76040

PHOTOMETRIC PLAN

SCALE: 1" = 20'-0"

REVISIONS
1.
2.
3.
4.
5.
6.
7.

ARCHITECT: G.C.
DRAFTSMAN: S.W.
CHECKED BY: K.M.
DATE 07-20-15
PROTOTYPE SIZE 7N2-L

PH1.0

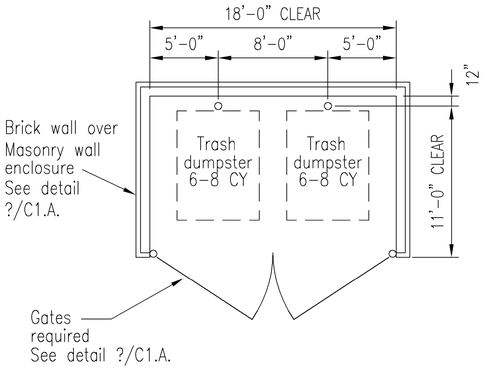

NOTE: Bollards behind the dumpsters shall be 6'-0" tall above the pavement surface and extend 3'-0" into the ground. Paint inside CMU same color as brick

NO SCALE SEC-C17M

DUMPSTER LAYOUT

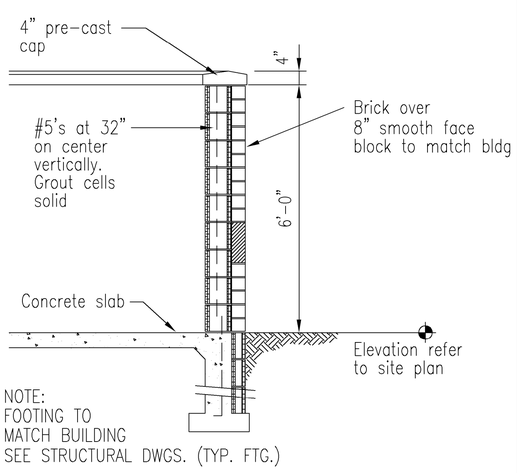

NOTE:
FOOTING TO MATCH BUILDING
SEE STRUCTURAL DWGS. (TYP. FTG.)

NO SCALE MDUMPSEC

9 DUMPSTER SECTION

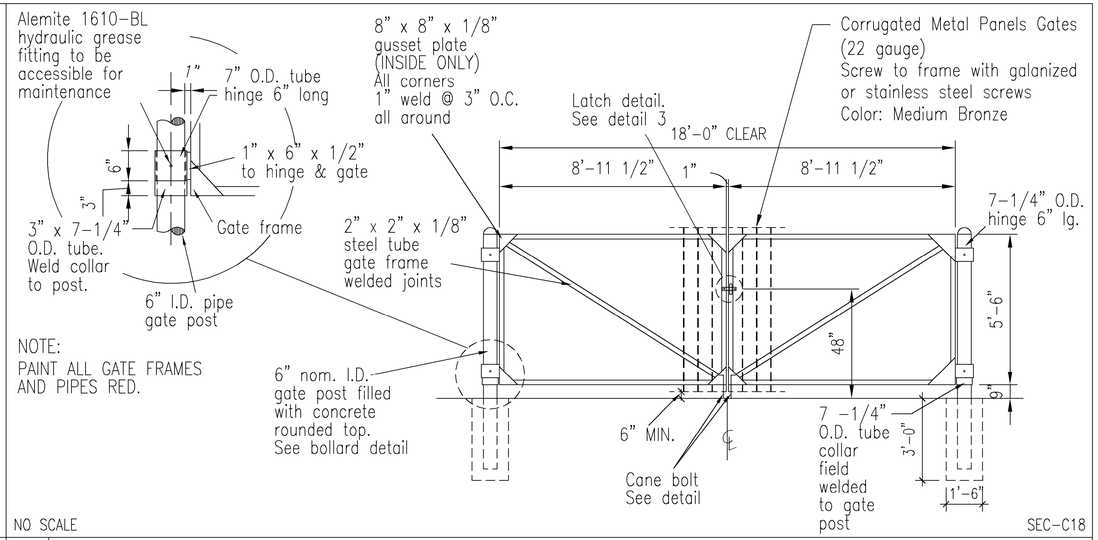

NOTE:
PAINT ALL GATE FRAMES AND PIPES RED.

NO SCALE SEC-C18

10 GATE DETAIL FOR DUMPSTER ENCLOSURE

PRELIMINARY
FOR REVIEW ONLY
Not for construction or permit purposes.
Kimley»Horn
Kimley-Horn and Associates, Inc.
Engineer BRAD W. PICKERING
P.E. No. 102320 Date 07/20/2015

AUTOZONE, INC
123 South Front Street, 3rd Floor
Memphis, Tennessee 38103
TEL: (901)495-8714 FAX: (901) 495-8424

Prepared For: AutoZone STORE DEVELOPMENT
Store No. 3641
Industrial Boulevard (FM 157)
EULESS TX 76040
For Bidding & Contractor Information Contact: Kristine Hill (Admin) 615-964-1017
www.construction.com

DUMPSTER DETAILS

REVISIONS
1.
2.
3.
4.

SCALE:

Kimley»Horn
12750 MERIT DRIVE, SUITE 1000
DALLAS, TEXAS 75251
TEXAS FIRM REGISTRATION F-928
KHA PROJECT #068013015

DATE
07-20-2015

PROTOTYPE SIZE
7N2-L

DTL

© COPYRIGHT 2007

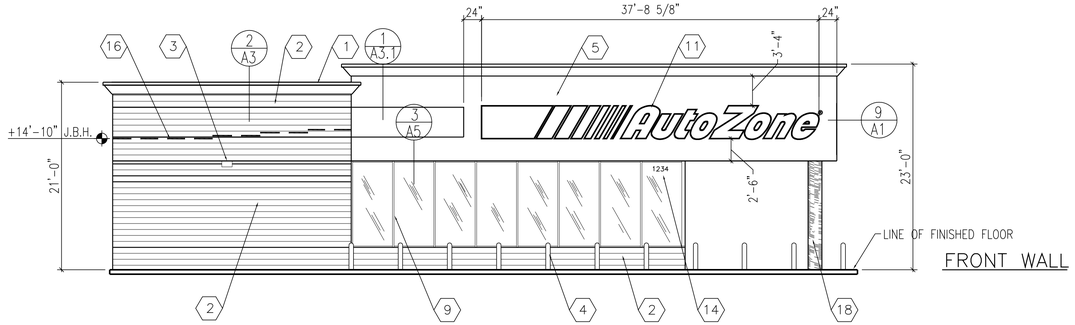

FRONT WALL

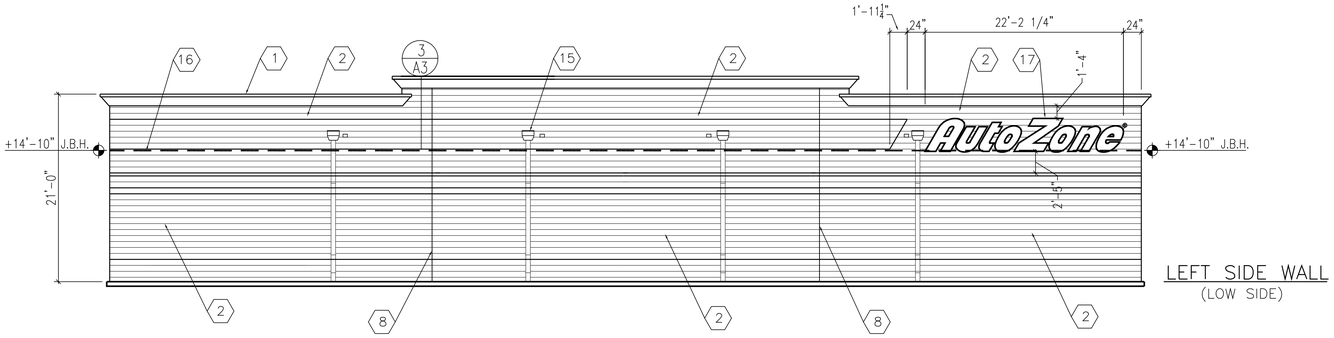

LEFT SIDE WALL
(LOW SIDE)

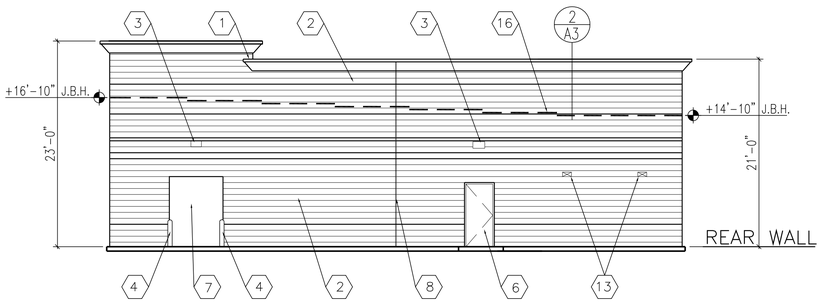

REAR WALL

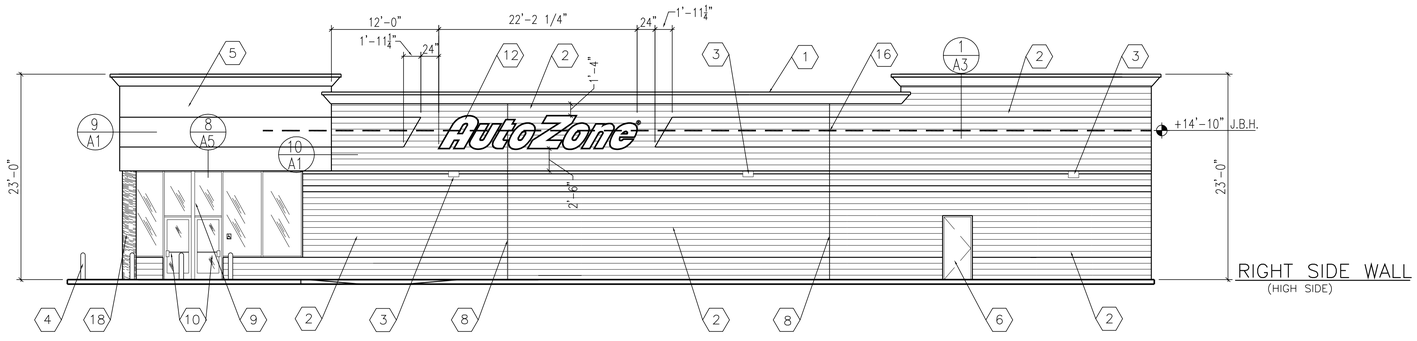

RIGHT SIDE WALL
(HIGH SIDE)

1/8" = 1'-0"

1 EXTERIOR ELEVATIONS

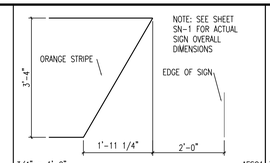

3/4" = 1'-0" AES01

6 ORANGE STRIPE TERMINATION

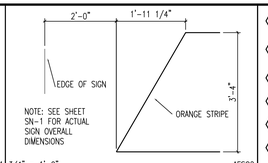

3/4" = 1'-0" AES02

7 ORANGE STRIPE TERMINATION

1. TWO PIECE COMPRESSION TRIM SEE DETAIL 4/A6
2. SPLIT FACE CONCRETE MASONRY UNITS SEE PAINT DETAIL SCHEME THIS SHEET
3. WALL MOUNTED LIGHT FIXTURE
4. PIPE GUARD WITH RED SLEEVE
5. MFG. WHITE EXTERIOR INSULATED FINISH – PAINT WHITE
6. PAINT MAN DOOR RED & METAL FRAMES BLACK
7. DO NOT PAINT OVERHEAD DOOR PAINT ANGLES BLACK
8. EXPANSION JOINT
9. ALUMINUM STOREFRONT – RED KYNAR FINISH
10. GLASS AND ALUMINUM DOORS – CLEAR ANODIZED FINISH
11. FRONT WALL SIGN – 44" CHANNEL LStrp
12. RIGHT SIDE WALL SIGN – 44" CHANNEL NStrp
13. TOILET WALL VENTS PAINT TO MATCH WALL
14. STORE ADDRESS – 8" WHITE REFLECTIVE NUMBERS
15. SCUPPERS AND DOWNSPOUTS. PAINTED TO MATCH BACKGROUND WALL COLOR. ADJACENT 4" H. X 6" W. OVERFLOW SCUPPER. FLOWLINE 2" ABOVE ROOF.
16. BOND BEAM AT ROOF LINE
17. LEFT SIDE WALL SIGN – 44" CHANNEL NStrp
18. CORRUGATED COLUMN PAINT RED

1/8" = 1'-0" AWN01N

2 ELEVATION KEY NOTES

NOTE: CENTER ALL WALL SIGNAGE VERTICALLY ON THE PAINTED ORANGE STRIPE OR THE TOP TWO BRICK SOLDIER COURSES. PAINT ORANGE STRIPE TO WITHIN 2' OF WALL SIGN. DO NOT PAINT ORANGE STRIPE BEHIND SIGN. CONTINUE ORANGE STRIPE ON E.I.F.S. ABOVE STOREFRONT.

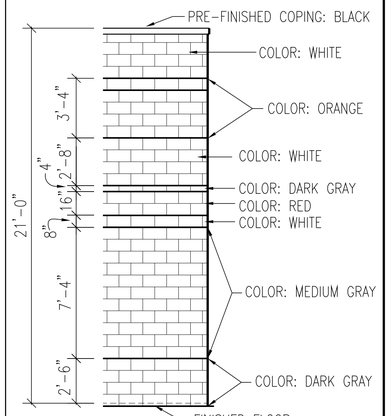

1/4" = 1'-0" AWE01

3 EXTERIOR WALL COLOR SCHEME

GENERAL NOTES:

1. REFER TO SECTION 09900 OF THE SPECIFICATIONS FOR PAINT AND EXTERIOR COATINGS. ALL COLORS ARE BY SHERWIN-WILLIAMS PAINT COMPANY.
2. PAINT RESTROOM WALL VENTS TO MATCH THE ADJACENT WALL COLOR.
3. SEALANT AT EXPANSION JOINTS TO MATCH ADJACENT WALL COLOR.
4. ALL MASONRY JOINTS TO BE CONCAVE TOOLED.

4 GENERAL NOTES

SIGNAGE NOTES:

1. AUTOZONE'S SIGN VENDOR WILL FURNISH AND INSTALL ALL SIGNS UNLESS OTHERWISE SPECIFICALLY NOTED ON THE DRAWINGS. WALL SIGNS TO BE INSTALLED ON SURFACES THAT ARE FURNISHED AND PREPARED BY GENERAL CONTRACTOR.
2. SIGN INSTALLER SHALL OBTAIN SIGN PERMITS AND INSTALL ALL FREESTANDING SIGNS AND THEIR FOUNDATIONS UNLESS NOTED OTHERWISE. GENERAL CONTRACTOR SHALL INSURE SIGN LOCATION IS TO GRADE AND SHALL MARK WHERE SIGN IS TO BE LOCATED.
3. GENERAL CONTRACTOR IS RESPONSIBLE FOR INSTALLATION OF PRIMARY ELECTRICAL, AND FINAL ELECTRICAL HOOK-UP. SEE "SN" SHEETS FOR ADDITIONAL INFORMATION.
4. SEE SHEET E3 FOR LOCATIONS OF J-BOXES TERMINATING EACH WALL SIGN CIRCUIT.

3/32" = 1'-0" AWN02

5 SIGNAGE NOTES – BUILDING

J.B.H. = JOIST BEARING HEIGHT

REVISIONS

1	REV1	2	REV2	3	REV3
4	REV4	5	REV5	6	REV6

AutoZone Store No. 3641
INDUSTRIAL BLVD
EULESS TX 76040

EXTERIOR ELEVATIONS AND NOTES

Architect: George Callow
123 South Front Street
Memphis, Tennessee 38103
TEL: 901-495-6500 FAX: (901) 495-8969

For Bidding & Contractor Information Contact:
McGraw - Hill Construction Tel. 615-884-1017
www.construction.com

07/17/15

7N2-L

A-2

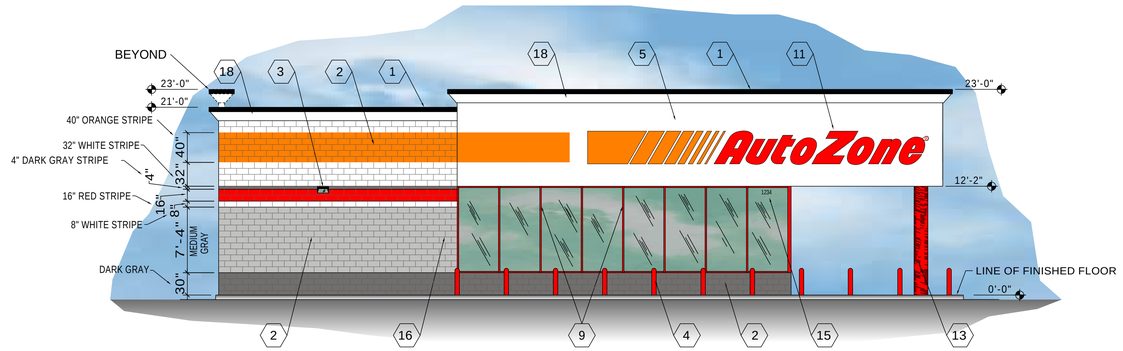

FRONT WALL

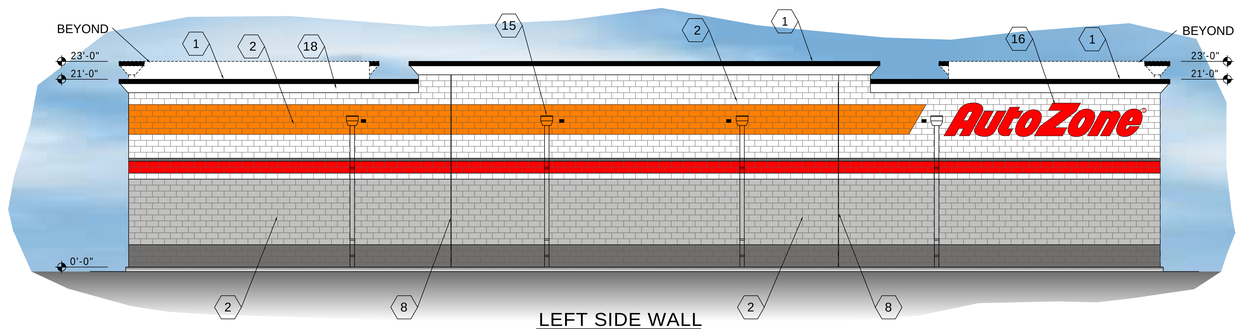

LEFT SIDE WALL
(LOW SIDE)

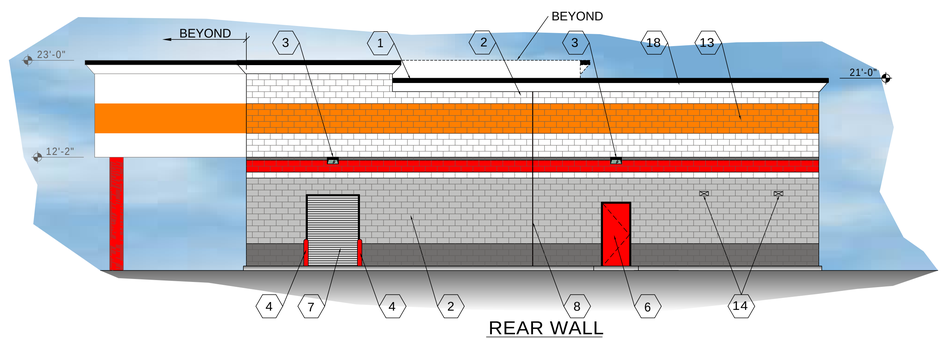

REAR WALL

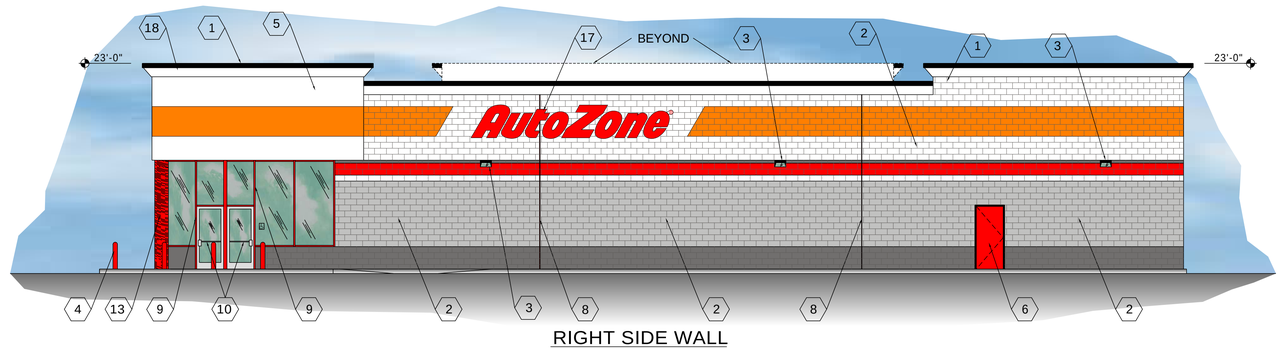

RIGHT SIDE WALL

1. TWO PIECE COMPRESSION TRIM
2. SPLIT FACE CONCRETE MASONRY UNITS
3. WALL MOUNTED LIGHT FIXTURE
4. PIPE GUARD WITH RED SLEEVE
5. STUCCO - PAINT WHITE
6. PAINT MAN DOOR RED & METAL FRAMES BLACK
7. DO NOT PAINT OVERHEAD DOOR PAINT ANGLES BLACK
8. EXPANSION JOINT
9. ALUMINUM STOREFRONT - RED KYNAR FINISH
10. GLASS AND ALUMINUM DOORS - CLEAR ANODIZED FINISH
11. FRONT WALL SIGN - 44" CHANNEL LStrp
12. PAINT GUTTER AND DOWNSPOUTS TO MATCH BACKGROUND WALL COLOR.
13. CORRUGATED COLUMN PAINT RED
14. TOILET WALL VENTS PAINT TO MATCH WALL
15. STORE ADDRESS - 8" WHITE REFLECTIVE NUMBERS
16. LEFT WALL SIGN - 44" CHANNEL NStrp
17. RIGHT WALL SIGN - 44" CHANNEL NStrp
18. CORNICE WITH STUCCO FINISH.

AutoZone

Color Elevation
AutoZone Store #3641
Euless, TX 76040

Date: July 20, 2015
Revised Date: October 05, 2015