ALL FRAMING IS 2" X 2" GALVANIZED TUBING

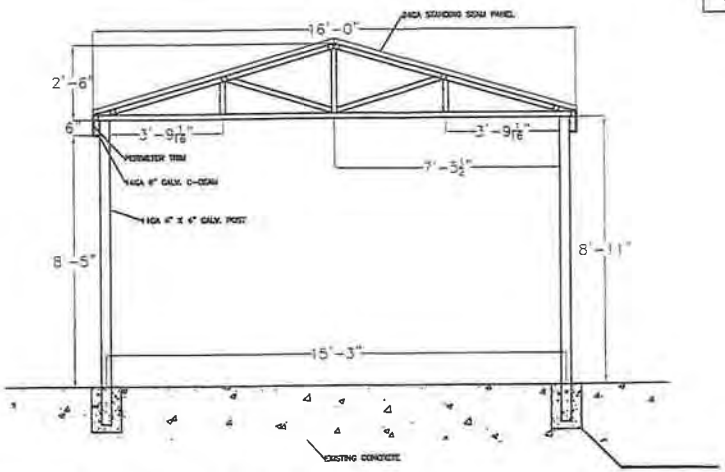

12" ϕ x 4'-0" Deep
OR
18" ϕ x 3'-6" Deep
TYPICAL

② 27'-0" AWNING SIDE VIEW
SCALE: 1/4"=1'

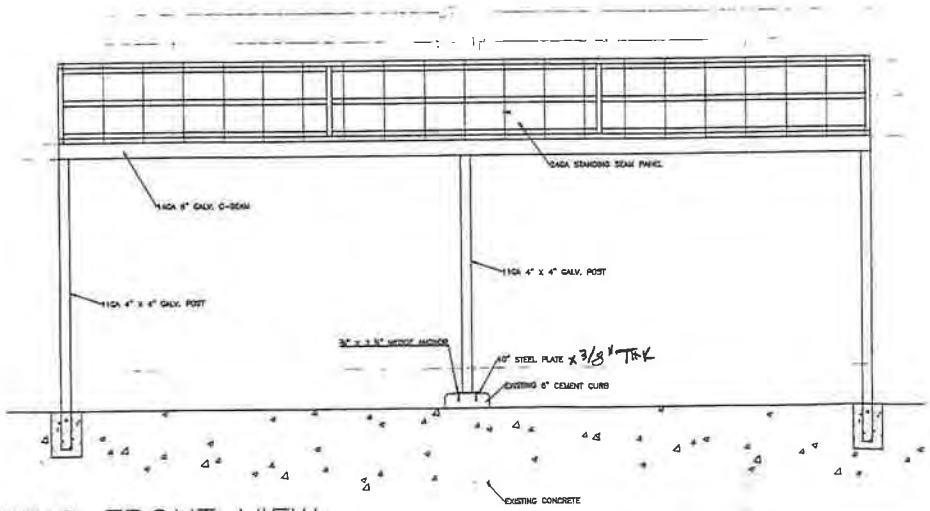

① 27'-0" AWNING FRONT VIEW
SCALE: 1/4"=1'

STATE OF TEXAS
WILLIAM N. BOWEN II
36201
REGISTERED PROFESSIONAL ENGINEER

5-17-10

BBS Consultants
Structural Engineers
TBPE Firm #: 4345

Victory Awning
6801 OLD RANDOL MILL RD.
FORT WORTH, TEXAS 76120

MY CREDIT UNION
1014 N. INDUSTRIAL DRIVE
EULESS, TEXAS
76039

SHEET DESCRIPTION
27' SIDE AND FRONT VIEWS

DATE:	1-27-2010
DRAWN:	JD
CHECKED	
JOB NO:	7819
CAD FILE	
XREF FILES	

SHEET NUMBER
1
SHEET 1 OF 4 SHEETS

ALL FRAMING IS 2" X 2"
GALVANIZED TUBING

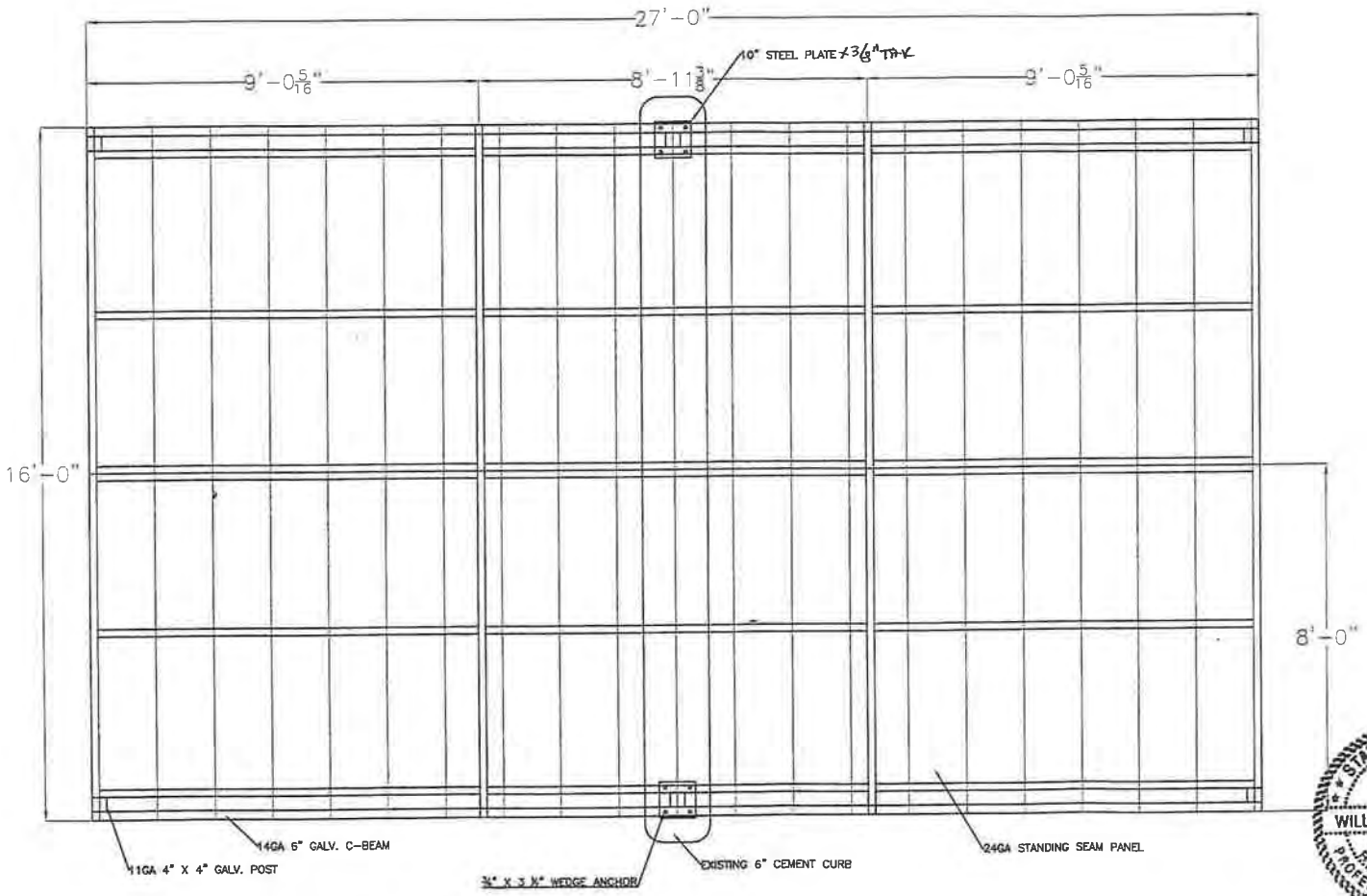

① 27'-0" AWNING TOP VIEW
SCALE: 3/8"=1'

STATE OF TEXAS
WILLIAM N. BOWEN II
36201
REGISTERED PROFESSIONAL ENGINEER
3-19-10

BBS Consultants
Structural Engineers
TBPE Firm #: 4345

Victory Awning
6801 OLD RANDOL MILL RD.
FORT WORTH, TEXAS 76120

MY CREDIT UNION
1014 N. INDUSTRIAL DRIVE
EULESS, TEXAS
76039

SHEET DESCRIPTION
27' TOP VIEW

DATE:	1-27-2010
DRAWN:	JD
CHECKED:	
JOB NO:	7819
CAD FILE:	
XREF FILES:	

SHEET NUMBER
2
SHEET: 2 OF 4 SHEETS

ALL FRAMING IS 2" X 2"
GALVANIZED TUBING

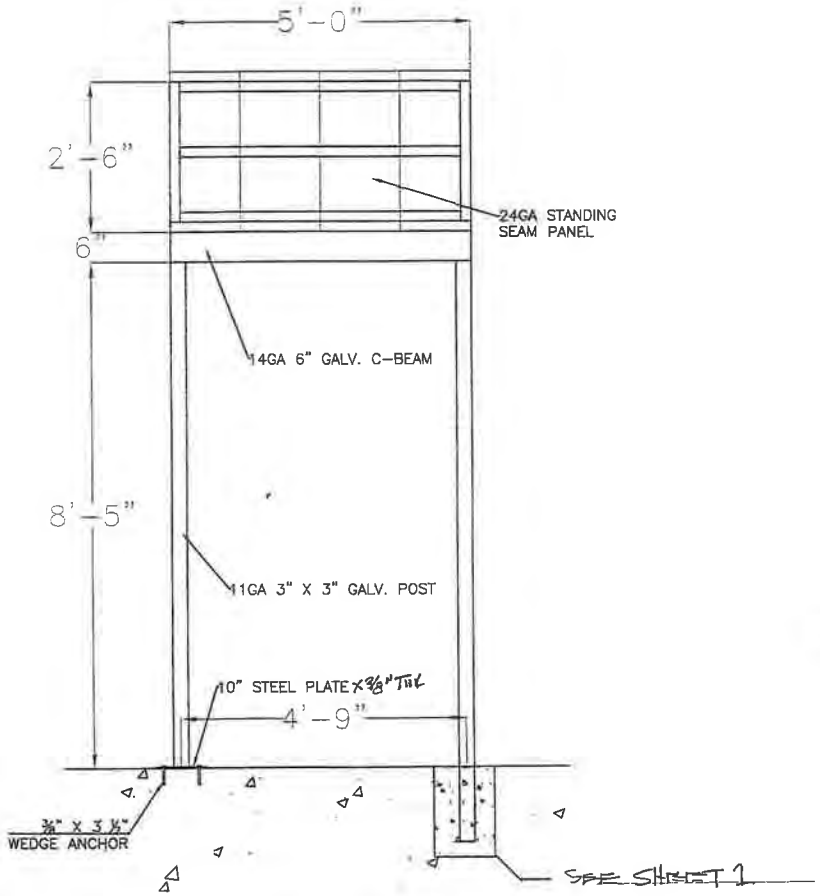

② 5'-0" AWNING FRONT VIEW
SCALE: 1/2"=1'

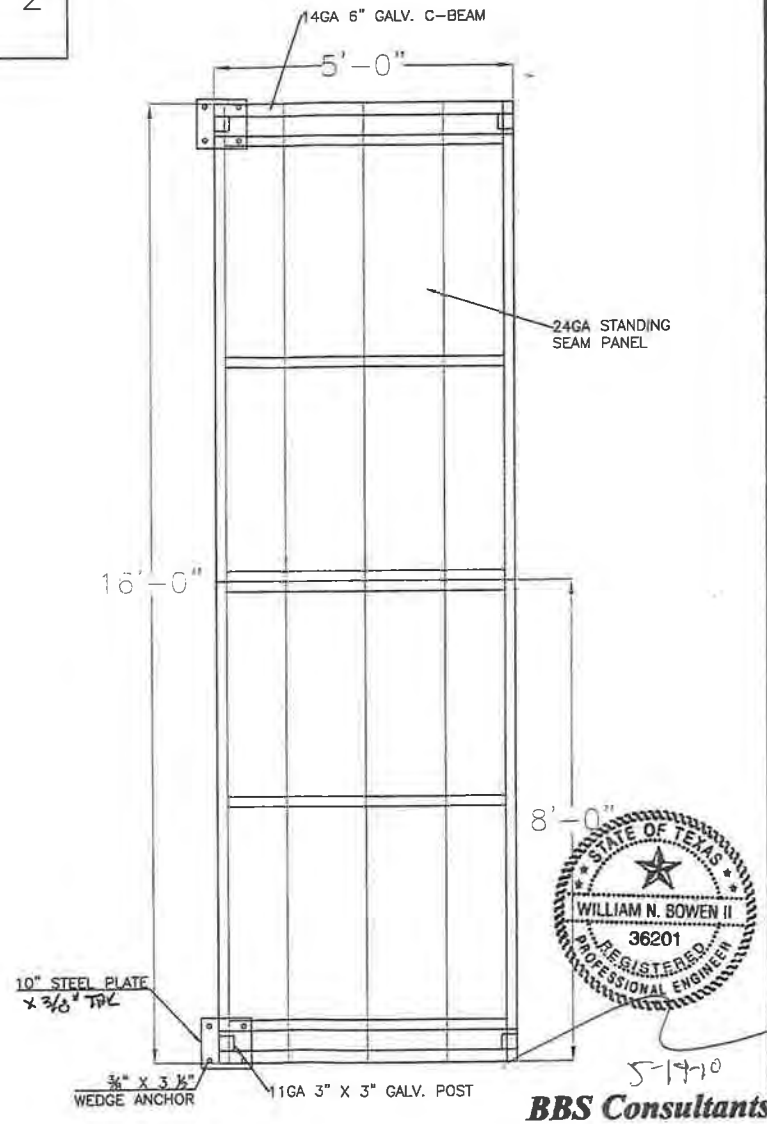

① 5'-0" AWNING TOP VIEW
SCALE: 1/2"=1'

STATE OF TEXAS
WILLIAM N. BOWEN II
36201
REGISTERED PROFESSIONAL ENGINEER

5-19-10

BBS Consultants
Structural Engineers
TBPE Firm #: 4345

Victory Awning
6801 OLD RANDOL MILL RD.
FORT WORTH, TEXAS 76120

MY CREDIT UNION
1014 N. INDUSTRIAL DRIVE
EULESS, TEXAS
76039

SHEET DESCRIPTION
5' TOP AND FRONT VIEW

DATE: 1-27-2010
DRAWN: JD
CHECKED:
JOB NO: 7819
CAD FILE:
XREF FILES:

SHEET NUMBER
3

SHEET: 3 OF 4 SHEETS

ALL FRAMING IS 2" X 2"
GALVANIZED TUBING

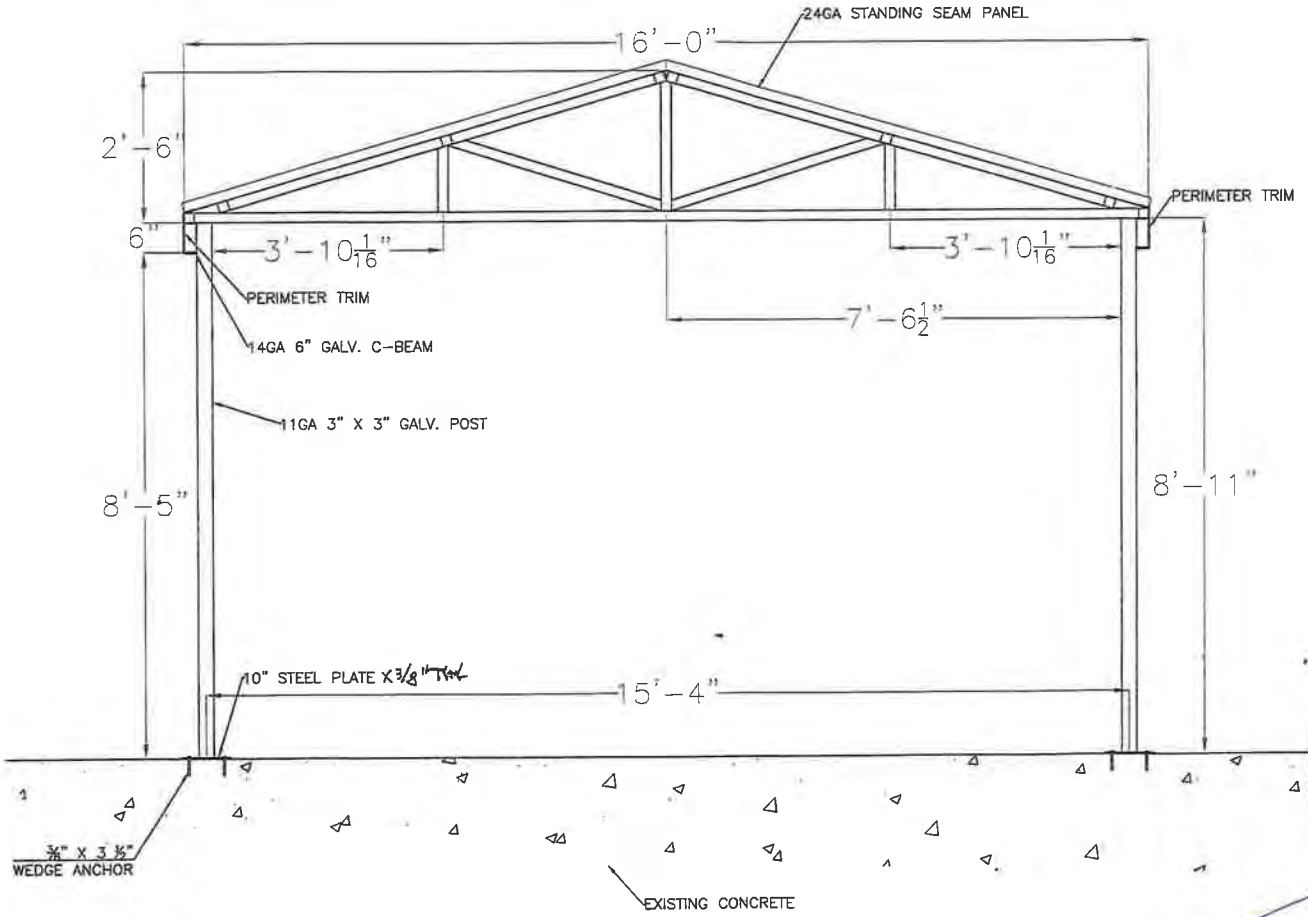

1 5'-0" AWNING SIDE VIEW
SCALE: 1/2"=1'

STATE OF TEXAS
WILLIAM N. BOWEN II
36201
REGISTERED PROFESSIONAL ENGINEER

7-19-10

BBS Consultants
Structural Engineers
TBPE Firm #: 4345

Victory Awning
6801 OLD RANDOL MILL RD.
FORT WORTH, TEXAS 76120

MY CREDIT UNION
1014 N. INDUSTRIAL DRIVE
EULESS, TEXAS
76039

SHEET DESCRIPTION
5' SIDE VIEW

DATE: 1-27-2010
DRAWN: JD
CHECKED:
JOB NO. 7819
CAD FILE:
XREF FILES:

SHEET NUMBER
4
SHEET: 4 OF 4 SHEETS

AP PANEL - COLOR SELECTION

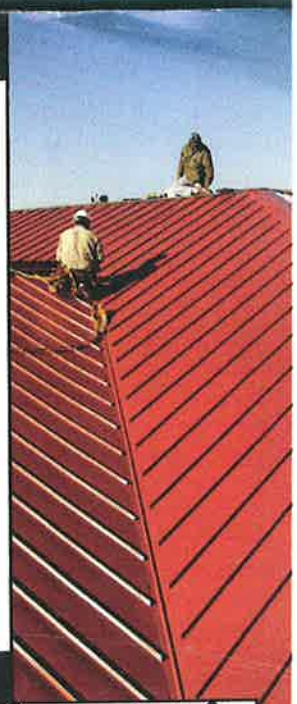

- BRIGHT COPPER
- RUSTIC RED
- MANSARD BROWN
- CHARCOAL
- BURNISHED SLATE
- DEEP GREEN
- LIGHT STONE
- WHITE
- GALVALUME PLUS*
- IVY GREEN

MATCHING Roof & DRIVE UP AWNING

R, U, & CORRUGATED PANELS - COLOR SELECTION

- DEEP GREEN
- DEEP BLUE
- MANSARD BROWN
- BANNER RED
- COCO BROWN
- BRIGHT COPPER
- BURNISHED SLATE
- CRIMSON RED
- MARINE GREEN
- COLONY GREEN
- HAWAIIAN BLUE
- FOREST GREEN
- IVY GREEN
- CHARCOAL
- GOLD
- LIGHT STONE
- DESERT TAN
- TAN
- LIGHT GRAY
- SADDLE LEATHER BROWN
- CHESTNUT BROWN
- RUSTIC BROWN
- SUNSET RED
- RUSTIC RED
- BURGUNDY
- DEEP RIVER BLUE
- SMOKESTACK GRAY
- SMOKEY PEWTER
- TWILIGHT GRAY
- WHITE
- SILVER METALLIC
- GALVALUME PLUS*

*Galvalume has a protective top coat which may possibly change the color of the panels, over a period of time, giving a slight brownish tint to the panels.

BEFORE

AFTER

05/05/2009

09/29/2009

05/05/2009

05/05/2009

09/29

05/05/2009

07/13/2009

08/31/2009

06/01/2009

DRIVE THRU
07/13/2009

05/05/2009

My Credit Union
ATM
12/07/2009

05/05/2009

11.9 % apr

Your Community Credit Union
My Credit Union
Checking · Savings · Auto & Home Loans
ATM

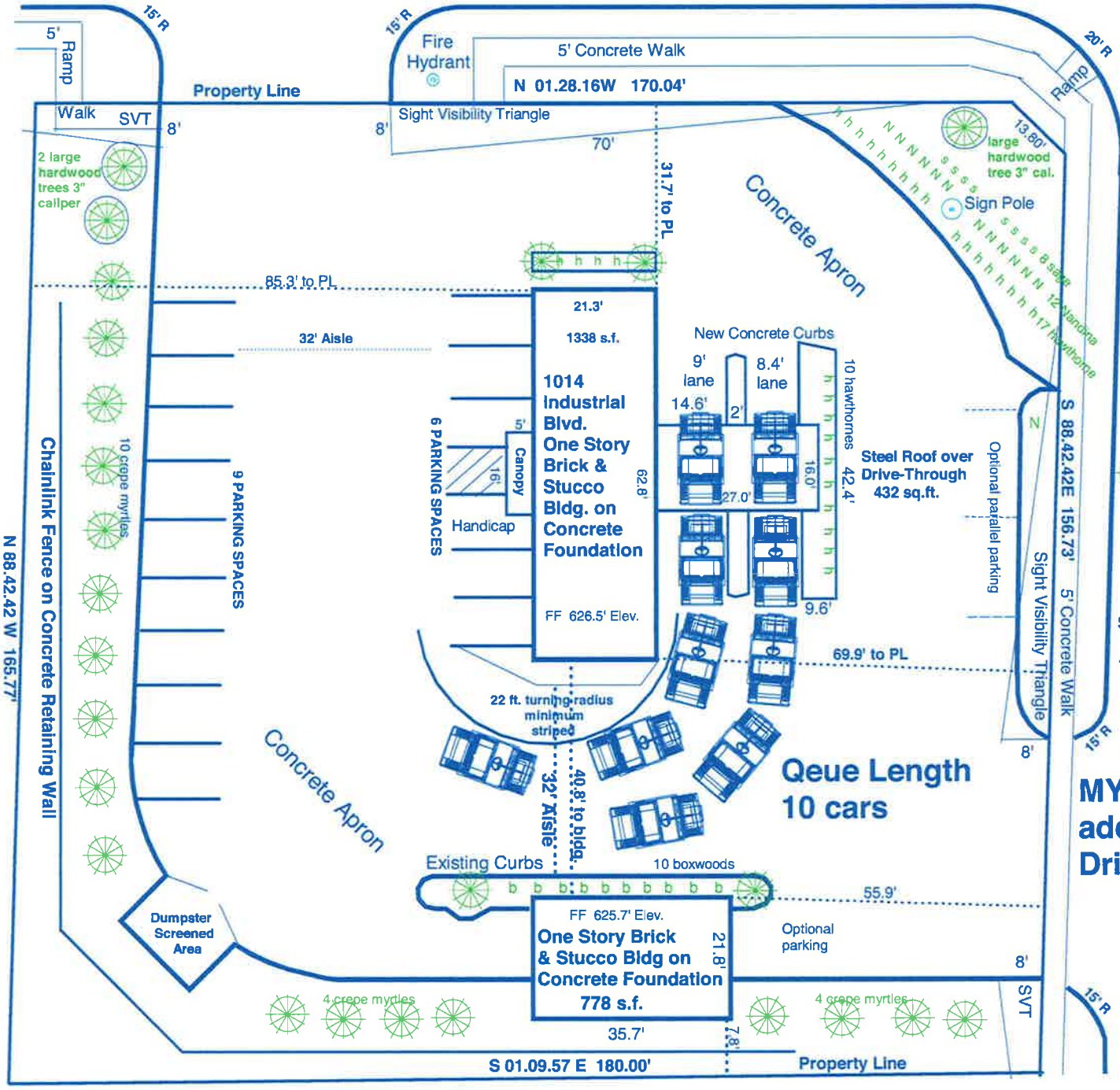

PDF Created with deskPDF PDF Writer - Trial :: http://www.docudesk.com

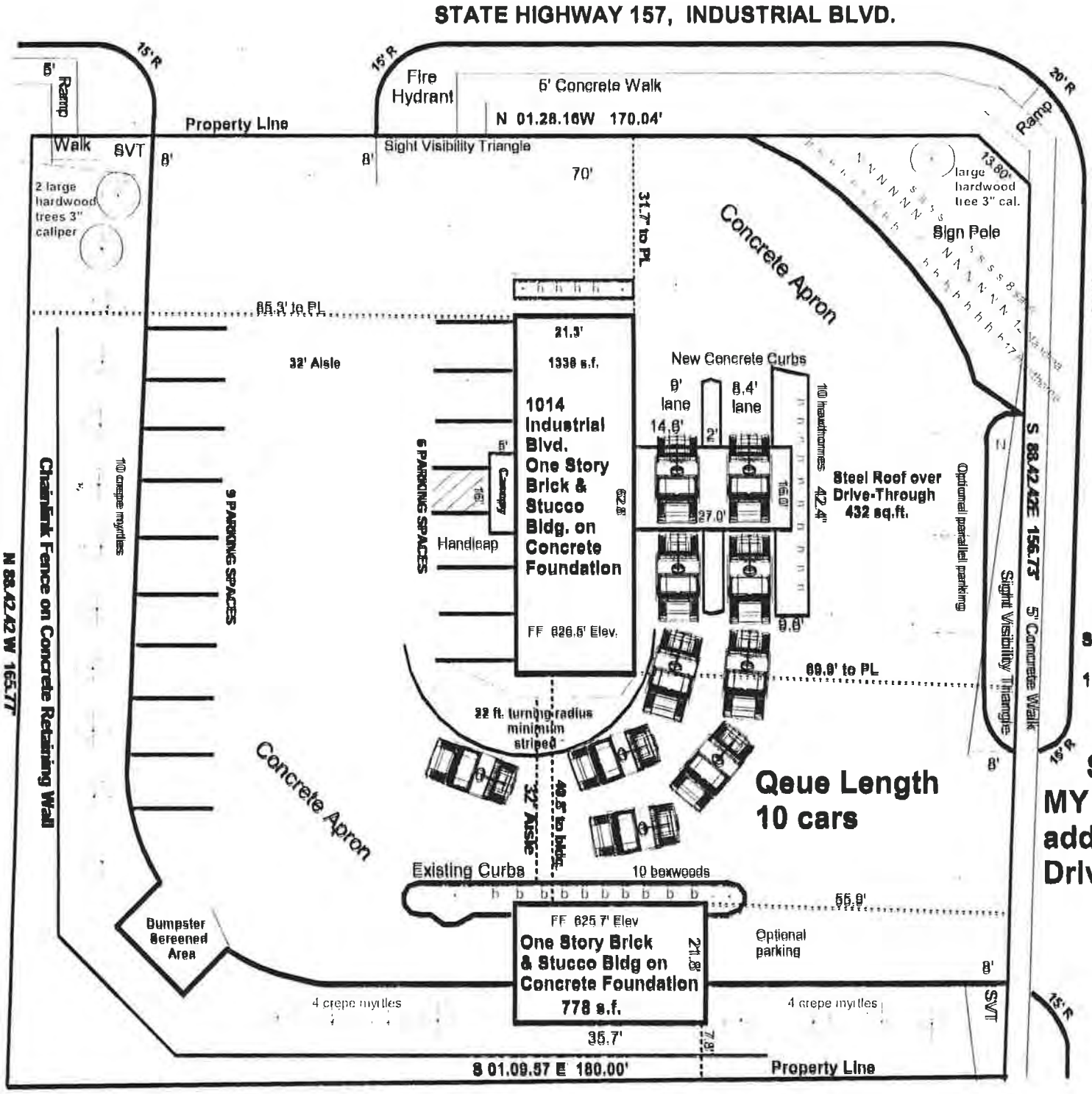

STATE OF TEXAS
WILLIAM N. BOWEN II
36201
REGISTERED PROFESSIONAL ENGINEER

5-14-10

LOT 1-A
HARWOOD PLAZA
ADDITION
Volume 16244
Page 0149
DRTCT

8790 sq.ft. of planting area
ALL IRRIGATED

Planting Table	totals
Crepe Myrtle	28
h Hawthorne	31
N Nandina	13
b Boxwood	10
s Sage	8

Scale bar 10 feet

15 Parking Spaces

N

SITE PLAN
MY CREDIT UNION
adding Canopy and Drive-thru svc lanes

BBS Consultants
Structural Engineers
TBPE Firm #: 4345

Drawings Sealed for Canopy Structure Only

PDF Created with deskPDF PDF Writer - Trial :: http://www.docudesk.com